CONTENTS

CHAPTER

17

Symmetrical Fault Calculations

17.1 Symmetrical Faults on 3-Phase System

17.2 Limitation of Fault Current

17.3 Percentage Reactance

17.4 Percentage Reactance and Base kVA

17.5 Short-Circuit kVA

17.6 Reactor Control of Short-Circuit Currents

17.7 Location of Reactors

17.8 Steps for Symmetrical Fault Calculations

Introduction

Most of the faults on the power system lead to a short-circuit condition. When such a condition occurs, a heavy current (called short circuit current) flows through the equipment, causing considerable damage to the equipment and interruption of service to the consumers. There is probably no other subject of greater importance to an electrical engineer than the question of determination of short circuit currents under fault conditions. The choice of apparatus and the design and arrangement of practically every equipment in the power system depends upon short-circuit current considerations. In this chapter, we shall confine our discussion to fault currents due to symmetrical faults.

17.1 Symmetrical Faults on 3-Phase System

That fault on the power system which gives rise to symmetrical fault currents (i.e. equal fault currents in the lines with 120° displacement) is called a **symmetrical fault.**

The symmetrical fault occurs when all the three conductors of a 3-phase line are brought together simultaneously into a short-

circuit condition as shown in Fig. 17.1. This type of fault gives rise to symmetrical currents *i.e.* equal fault currents with 120° displacement. Thus referring to Fig. 17.1, fault currents I_R, I_Y and I_B will be equal in magnitude with 120° displacement among them. Because of balanced nature of fault, only one* phase need be considered in calculations since condition in the other two phases will also be similar. The following points may be particularly noted :

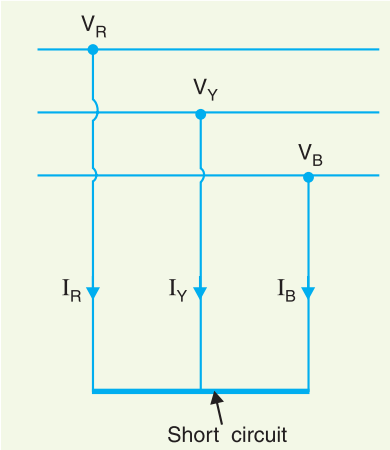

Fig. 17.1

(i) The symmetrical fault rarely occurs in practice as majority of the faults are of unsymmetrical nature. However, symmetrical fault calculations are being discussed in this chapter to enable the reader to understand the problems that short circuit conditions present to the power system.

(ii) The symmetrical fault is the most severe and imposes more heavy duty on the circuit breaker.

17.2 Limitation of Fault Current

When a short circuit occurs at any point in a system, the short-circuit current is limited by the impedance of the system upto the point of fault. Thus referring to Fig. 17.2, if a fault occurs on the feeder at point *F*, then the short circuit current from the generating station will have a value limited by the impedance of generator and transformer and the impedance of the line between the generator and the point of fault. This shows that the knowledge of the impedances of various equipment and circuits in the line of the system is very important for the determination of short-circuit currents.

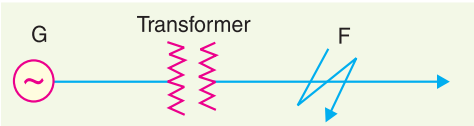

Fig. 17.2

In many situations, the impedances limiting the fault current are largely reactive, such as transformers, reactors and generators. Cables and lines are mostly resistive, but where the total reactance in calculations exceeds 3 times the resistance, the latter is usually neglected. The error introduced by this assumption will not exceed 5%.

17.3 Percentage Reactance

The reactance of generators, transformers, reactors *etc.* is usually expressed in *percentage reactance* to permit rapid short circuit calculations. The percentage reactance of a circuit is defined as under :

It is the percentage of the total phase-voltage dropped in the circuit when full-load current is flowing i.e.,

$$\%X = \frac{I\,X}{V} \times 100 \qquad ...(i)$$

where I = full-load current

V = phase voltage

X = reactance in ohms per phase

* Balanced three-phase faults, like balanced 3-ϕ loads, may be handled on a line-to-neutral basis.

Alternatively, percentage reactance (%X) can also be expressed in terms* of kVA and kV as under :

$$\%X = \frac{(\text{kVA})\,X}{10\,(\text{kV})^2} \qquad ...(ii)$$

where X is the reactance in ohms.

If X is the only reactance element in the circuit, then short-circuit current is given by ;

$$I_{SC} = \frac{V}{X}$$

$$= I \times \left(\frac{100}{\%X}\right) \qquad \text{[By putting the value of } X \text{ from exp. } (i)\text{]}$$

i.e. short circuit current is obtained by multiplying the full-load current by 100/% X.

For instance, if the percentage reactance of an element is 20% and the full-load current is 50 A, then short-circuit current will be 50 × 100/20 = 250 A when only that element is in the circuit.

It may be worthwhile to mention here the advantage of using percentage reactance instead of ohmic reactance in short-circuit calculations. Percentage reactance values remain unchanged as they are referred through transformers, unlike ohmic reactances which become multiplied or divided by the square of transformation ratio. This makes the procedure simple and permits quick calculations.

17.4 Percentage Reactance and Base kVA

It is clear from exp. (*ii*) above that percentage reactance of an equipment depends upon its kVA rating. Generally, the various equipments used in the power system have different kVA ratings. Therefore, it is necessary to find the percentage reactances of all the elements on a common kVA rating. This common kVA rating is known as *base kVA.* The value of this base kVA is quite unimportant and may be :

(*i*) equal to that of the largest plant

(*ii*) equal to the total plant capacity

(*iii*) any arbitrary value

The conversion can be effected by using the following relation :

$$\text{\% age reactance at base kVA} = \frac{\text{Base kVA}}{\text{Rated kVA}} \times \text{\% age reactance at rated kVA}$$

Thus, a 1000 kVA transformer with 5% reactance will have a reactance of 10% at 2000 kVA base.

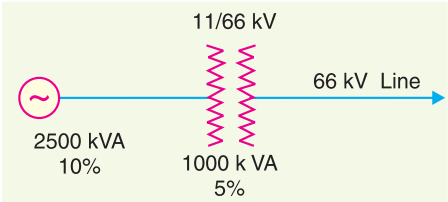

Fig. 17.3

Illustration. The fact that the value of base kVA does not affect the short circuit current needs illustration. Consider a 3-phase transmission line operating at 66 kV and connected through a 1000 kVA transformer with 5% reactance to a generating station bus-bar. The generator is of 2500 kVA with 10% reactance. The single line diagram of the system is shown in Fig. 17.3. Suppose a short-circuit fault between three phases occurs

---

* From exp. (*i*), $X = \dfrac{(\%X)\,V}{100I} = \dfrac{(\%X)\,V \times V}{100 \times VI} = \dfrac{(\%X)\left(\dfrac{V}{1000}\right)\left(\dfrac{V}{1000}\right) \times 1000}{100 \times \left(\dfrac{V}{1000}\right) \times I} = \dfrac{(\%X)\,(\text{kV})^2 \times 10}{\text{kVA}}$

$\therefore \quad \%X = \dfrac{(\text{kVA})\,X}{10\,(\text{kV})^2}$

at the high voltage terminals of transformer. It will be shown that whatever value of base kVA we may choose, the value of short-circuit current will be the same.

(i) Suppose we choose 2500 kVA as the common base kVA. On this base value, the reactances of the various elements in the system will be :

Reactance of transformer at 2500 kVA base

$$= 5 \times 2500^{*}/1000 = 12{\cdot}5\%$$

Reactance of generator at 2500 kVA base

$$= 10 \times 2500/2500 = 10\%$$

Total percentage reactance on the common base kVA

$$\%X = 12{\cdot}5 + 10 = 22{\cdot}5\%$$

The full† load current corresponding to 2500 kVA base at 66 kV is given by ;

$$I = \frac{2500 \times 1000}{\sqrt{3} \times 66 \times 1000} = 21{\cdot}87 \text{ A}$$

$$\therefore \quad \text{Short-circuit current, } I_{SC} = I \times \frac{100}{\%X} = 21{\cdot}87 \times \frac{100}{22{\cdot}5} = \mathbf{97{\cdot}2\ A}$$

(ii) Now, suppose we choose 5000 kVA as the common base value.

Reactance of transformer at 5000 kVA base

$$= 5 \times 5000/1000 = 25\%$$

Reactance of generator at 5000 kVA base

$$= 10 \times 5000/2500 = 20\%$$

Total percentage reactance on the common base kVA

$$\%X = 25 + 20 = 45\%$$

Full-load current corresponding to 5000 kVA at 66 kV is

$$I = \frac{5000 \times 1000}{\sqrt{3} \times 66 \times 1000} = 43{\cdot}74 \text{ A}$$

$$\therefore \quad \text{Short-circuit current, } I_{SC} = I \times \frac{100}{\%X} = 43{\cdot}74 \times \frac{100}{45} = \mathbf{97{\cdot}2\ A}$$

which is the same as in the previous case.

From the above illustration, it is clear that whatever may be the value of base kVA, short-circuit current is the same. However, in the interest of simplicity, numerically convenient value for the base kVA should be chosen.

17.5 Short-Circuit kVA

Although the potential at the point of fault is zero, it is a normal practice to express the short-circuit current in terms of short-circuit kVA based on the normal system voltage at the point of fault.

The product of normal system voltage and short-circuit current at the point of fault expressed in kVA is known as **short-circuit kVA**.

Let V = normal phase voltage in volts

I = full-load current in amperes at base kVA

$\%X$ = percentage reactance of the system on base kVA upto the fault point

---

* % reactance at base kVA $= \dfrac{\text{base kVA}}{\text{rated kVA}} \times$ % reactance at rated kVA

† Full-load current has to be found out for the base kVA selected.

As proved in Art 17.3,

Short-circuit current, $I_{SC} = I\left(\frac{100}{\%X}\right)$

∴ Short-circuit kVA for 3-phase circuit

$$= \frac{3\,V\,I_{SC}}{1000}$$

$$= \frac{3\,V\,I}{1000} \times \frac{100}{\%X}$$

$$= \text{Base kVA} \times \frac{100}{\%X}$$

i.e. short-circuit kVA is obtained by multiplying the base kVA by 100/% *X*.

17.6 Reactor Control of Short-Circuit Currents

With the fast expanding power system, the fault level (*i.e.* the power available to flow into a fault) is also rising. The circuit breakers connected in the power system must be capable of dealing with maximum possible short-circuit currents that can occur at their points of connection. Generally, the reactance of the system under fault conditions is low and fault currents may rise to a dangerously high value. If no steps are taken to limit the value of these short-circuit currents, not only will the duty required of circuit breakers be excessively heavy, but also damage to lines and other equipment will almost certainly occur.

In order to limit the short-circuit currents to a value which the circuit breakers can handle, additional reactances known as *reactors* are connected in series with the system at suitable points. A reactor is a coil of number of turns designed to have a large inductance as compared to its ohmic resistance. The forces on the turns of these reactors under short-circuit conditions are considerable and, therefore, the windings must be solidly braced. It may be added that due to very small resistance of reactors, there is very little change in the efficiency of the system.

Advantages

(*i*) Reactors limit the flow of short-circuit current and thus protect the equipment from overheating as well as from failure due to destructive mechanical forces.

(*ii*) Troubles are localised or isolated at the point where they originate without communicating their disturbing effects to other parts of the power system. This increases the chances of continuity of supply.

(*iii*) They permit the installation of circuit breakers of lower rating.

17.7 Location of Reactors

Short circuit current limiting reactors may be connected **(*i*)** in series with each generator **(*ii*)** in series with each feeder and **(*iii*)** in bus-bars. No definite statement can be given as to which one of the above locations is preferable; each installation has its own particular demands which must be carefully considered before a choice of reactor location can be made.

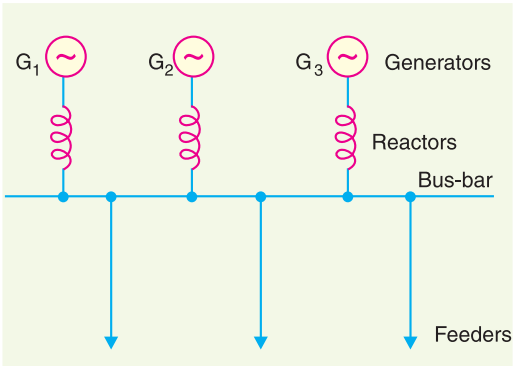

Fig. 17.4

(1) Generator reactors. When the reactors are connected in series with each generator, they are known as *generator reactors* (see Fig. 17.4). In this case, the reactor may be considered as a part of leakage reactance of the generator ; hence its effect is to

protect the generator in the case of any short-circuit beyond the reactors.

Disadvantages

(*i*) There is a constant voltage drop and power loss in the reactors even during normal operation.

(*ii*) If a bus-bar or feeder fault occurs close to the bus-bar, the voltage at the bus-bar will be reduced to a low value, thereby causing the generators to fall out of step.

(*iii*) If a fault occurs on any feeder, the continuity of supply to other is likely to be affected.

Due to these disadvantages and also since modern power station generators have sufficiently large leakage reactance to protect them against short-circuit, it is not a common practice to use separate reactors for the generators.

(2) Feeder reactors. When the reactors are connected in series with each feeder, they are known as *feeder reactors* (see Fig. 17.5). Since most of the short-circuits occur on feeders, a large number of reactors are used for such circuits. Two principal advantages are claimed for feeder reactors. Firstly, if a fault occurs on any feeder, the voltage drop in its reactor will not affect the bus-bars voltage so that there is a little tendency for the generator to lose synchronism. Secondly, the fault on a feeder will not affect other feeders and consequently the effects of fault are localised.

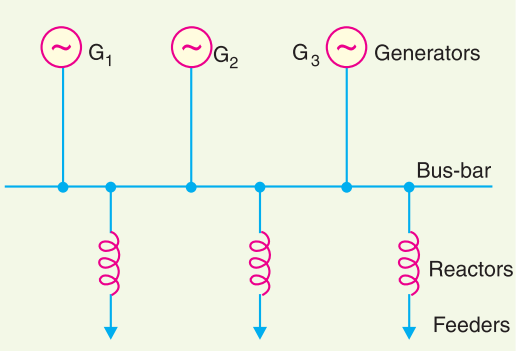

Fig. 17.5

Disadvantages

(*i*) There is a constant power loss and voltage drop in the reactors even during normal operation.

(*ii*) If a short-circuit occurs at the bus-bars, no protection is provided to the generators. However, this is of little importance because such faults are rare and modern generators have considerable leakage reactance to enable them to withstand short-circuit across their terminals.

(*iii*) If the number of generators is increased, the size of feeder reactors will have to be increased to keep the short-circuit currents within the ratings of the feeder circuit breakers.

(3) Bus-bar reactors. The above two methods of locating reactors suffer from the disadvantage that there is considerable voltage drop and power loss in the reactors even during normal operation. This disadvantage can be overcome by locating the reactors in the bus-bars. There are two methods for this purpose, namely ; Ring system and Tie-Bar system.

(*i*) *Ring system.* In this system, bus-bar is divided into sections and these sections are connected through reactors as shown in Fig. 17.6. Generally, one feeder is fed from one generator only. Under normal operating conditions, each generator will supply its own section of the load and very little power will be fed by other generators. This results in low power loss and voltage drop in the reactors. However, the principal advantage of the system is that if a fault occurs on any feeder, only one generator (to which the particular feeder is connected) mainly feeds the fault current while the current fed

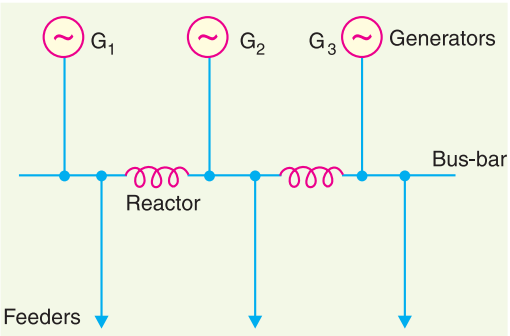

Fig. 17.6

from other generators is small due to the presence of reactors. Therefore, only that section of bus-bar is affected to which the feeder is connected, the other sections being able to continue in normal operation.

(*ii*) *Tie-Bar system.* Fig. 17.7 shows the tie-bar system. Comparing the ring system with tie-bar system, it is clear that in the tie-bar system, there are effectively two reactors in series between sections so that reactors must have approximately half the reactance of those used in a comparable ring system. Another advantage of tie-bar system is that additional generators may be connected to the system without requiring changes in the existing reactors. However, this system has the disadvantage that it requires an additional bus-bar *i.e.* the tie-bar.

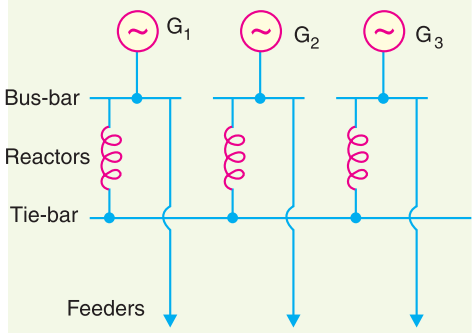

Fig. 17.7

17.8 Steps for Symmetrical Fault Calculations

It has already been discussed that 3-phase short-circuit faults result in symmetrical fault currents *i.e.* fault currents in the three phases are equal in magnitude but displaced 120° electrical from one another. Therefore, problems involving such faults can be solved by considering one phase only as the same conditions prevail in the other two phases. The procedure for the solution of such faults involves the following steps :

(*i*) Draw a single line diagram of the complete network indicating the rating, voltage and percentage reactance of each element of the network.

(*ii*) Choose a numerically convenient value of base kVA and convert all percentage reactances to this base value.

(*iii*) Corresponding to the single line diagram of the network, draw the reactance diagram showing one phase of the system and the neutral. Indicate the % reactances on the base kVA in the reactance diagram. The transformer in the system should be represented by a reactance in series.

(*iv*) Find the total % reactance of the network upto the point of fault. Let it be X%.

(*v*) Find the full-load current corresponding to the selected base kVA and the normal system voltage at the fault point. Let it be I.

(*vi*) Then various short-circuit calculations are :

$$\text{Short-circuit current, } I_{SC} = I \times \frac{100}{\%X}$$

$$\text{Short-circuit kVA} = \text{Base kVA} \times \frac{100}{\%X}$$

Example 17.1. *Fig. 17.8 (i) shows the single line diagram of a 3-phase system. The percentage reactance of each alternator is based on its own capacity. Find the short-circuit current that will flow into a complete 3-phase short-circuit at F.*

Solution. Let the base kVA be 35,000 kVA.

% Reactance of alternator A at the base kVA is

$$\% X_A = \frac{35{,}000}{15{,}000} \times 30 = 70\%$$

% Reactance of alternator B at the base kVA is

$$\% X_B = \frac{35{,}000}{20{,}000} \times 50 = 87{\cdot}5\ \%$$

Line current corresponding to 35000 kVA at 12 kV is

$$I = \frac{35{,}000 \times 10^3}{\sqrt{3} \times 12 \times 10^3} = 1684 \text{ A}$$

Fig. 17.8 (*ii*) shows the reactance* diagram of the network at the selected base kVA.

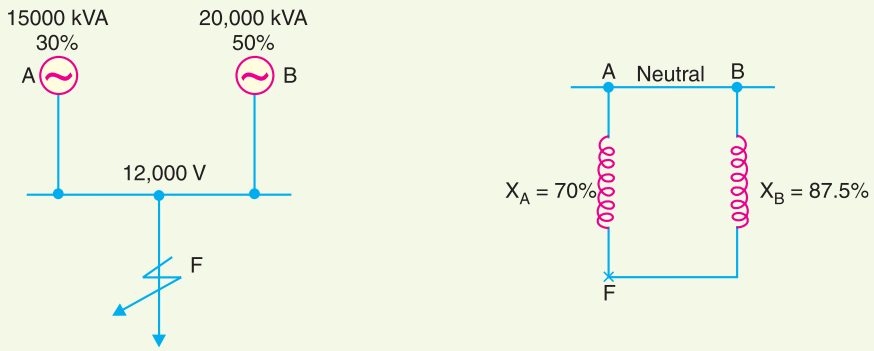

Single-line diagram (*i*) *Reactance diagram at 35,000 kVA* (*ii*)

Fig. 17.8

Total % reactance from generator neutral up to fault point is

$$\%X = X_A \parallel X_B$$

$$= \frac{X_A X_B}{X_A + X_B} = \frac{70 \times 87 \cdot 5}{70 + 87 \cdot 5} = 38 \cdot 89 \ \%$$

$\therefore$ Short-circuit current, $I_{SC} = I \times \frac{100}{\%X} = 1684 \times \frac{100}{38 \cdot 89} =$ **4330 A**

Alternate method. The problem can also be solved by component short-circuit current method. Each alternator supplies short circuit current to the fault. The total current fed to the fault is the sum of the two.

Full-load current delivered by alternator *A*,

$$I_A = \frac{\text{Rated kVA of alternator } A}{\sqrt{3} \times \text{Bus} - \text{bar voltage}}$$

$$= \frac{15000 \times 10^3}{\sqrt{3} \times 12 \times 10^3} = 721 \cdot 7 \text{ A}$$

$\therefore$ Short-circuit current fed to fault by alternator *A*,

$$I_{SA} = I_A \times \frac{100}{\text{\% Reactance}^{**} \text{of A}}$$

$$= 721 \cdot 7 \times (100/30) = 2405 \cdot 5 \text{ A}$$

Full-load line current delivered by alternator *B*,

$$I_B = \frac{20000 \times 10^3}{\sqrt{3} \times 12 \times 10^3} = 962 \cdot 28 \text{ A}$$

$\therefore$ Short-circuit current fed to fault by alternator *B*,

$$I_{SB} = 962 \cdot 28 \times 100/50 = 1924 \cdot 5 \text{ A}$$

$\therefore$ Total short-circuit current fed to fault,

$$I_{SC} = I_{SA} + I_{SB} = 2405 \cdot 5 + 1924 \cdot 5 = \mathbf{4330\ A}$$

* Note that the diagram shows one phase and neutral. The percentage reactances of the alternators are in parallel.

** At its own rated capacity.

Comments. In simple problems, either of the two methods can be used with about the same degree of ease. However, in complicated networks, it will be found that the first method (known as equivalent % reactance method) has greater advantage owing to the ease by which calculations can be carried out.

Example 17.2. *A 3-phase, 20 MVA, 10 kV alternator has internal reactance of 5% and negligible resistance. Find the external reactance per phase to be connected in series with the alternator so that steady current on short-circuit does not exceed 8 times the full load current.*

Solution.

Full-load current, $$I = \frac{20 \times 10^6}{\sqrt{3} \times 10 \times 10^3} = 1154{\cdot}7 \text{ A}$$

Voltage per phase, $$V = \frac{10 \times 10^3}{\sqrt{3}} = \frac{10{,}000}{\sqrt{3}} \text{ volts}$$

As the short-circuit current is to be 8 times the full-load current,

∴ Total percentage reactance required

$$= \frac{\text{Full - load current}}{\text{Short - circuit current}} \times 100$$

$$= \left(\frac{1}{8}\right) \times 100 = 12{\cdot}5 \ \%$$

∴ External percentage reactance required

$$= 12{\cdot}5 - 5 = 7{\cdot}5\%$$

Let $X\ \Omega$ be the per phase external reactance required.

Now, percentage reactance $$= \frac{I\,X}{V} \times 100$$

or $$7{\cdot}5 = \frac{1154{\cdot}7X}{\frac{10{,}000}{\sqrt{3}}} \times 100$$

∴ $$X = \frac{7{\cdot}5 \times 10000}{\sqrt{3} \times 100 \times 1154{\cdot}7} = \mathbf{0{\cdot}375\ \Omega}$$

Example 17.3. *A 3-phase transmission line operating at 10 kV and having a resistance of 1Ω and reactance of 4 Ω is connected to the generating station bus-bars through 5 MVA step-up transformer having a reactance of 5%. The bus-bars are supplied by a 10 MVA alternator having 10% reactance. Calculate the short-circuit kVA fed to symmetrical fault between phases if it occurs*

(*i*) *at the load end of transmission line*

(*ii*) *at the high voltage terminals of the transformer*

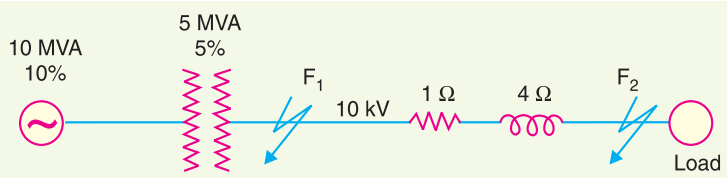

Fig. 17.9

Solution. Fig. 17.9 shows the single line diagram of the network. Let 10,000 kVA be the base kVA.

% reactance of alternator on base kVA,

$$\% X_A = \frac{10{,}000}{10 \times 10^3} \times 10 = 10\%$$

% reactance of transformer on base kVA,

$$\% X_T = \frac{10{,}000}{5 \times 10^3} \times 5 = 10\%$$

The line impedance is given in ohms. It can be converted into percentage impedance by using exp. (*ii*) of Art. 17.3.

% reactance of transmission line is

$$\% X_L = \frac{(\text{kVA}) \times \text{reactance in } \Omega}{10\ (\text{kV})^2}$$

$$= \frac{10{,}000 \times 4}{10 \times (10)^2} = 40\%$$

% age resistance of transmission line,

$$\% R_L = \frac{10{,}000 \times 1}{10 \times (10)^2} = 10\%$$

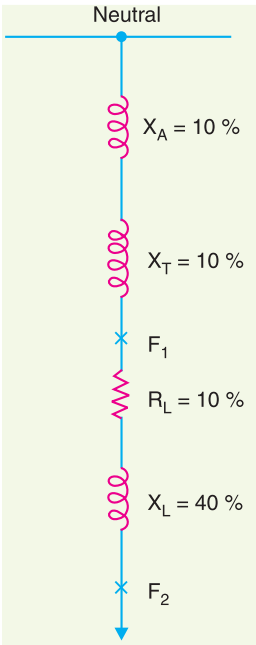

Fig. 17.10

(*i*) The reactance diagram of the network on the selected base kVA is shown in Fig. 17.10. For a fault at the end of a transmission line (point F_2),

$$\text{Total \% reactance} = \%X_A + \%X_T + \%X_L$$
$$= 10 + 10 + 40 = 60\%$$
$$\text{\% resistance} = 10\%$$

∴ % impedance from generator neutral upto fault point F_2

$$= \sqrt{(60)^2 + (10)^2} = 60{\cdot}83\%$$

∴ Short-circuit kVA = 10,000 × 100/60·83 = **16,440 kVA**

(*ii*) For a fault at the high voltage terminals of the transformer (point F_1),

Total % reactance from generator neutral upto fault point F_1

$$= \% X_A + \% X_T = 10 + 10 = 20\%$$

∴ Short-circuit kVA = 10,000 × 100/20 = **50,000 kVA**

Example 17.4. *The plant capacity of a 3-phase generating station consists of two 10,000 kVA generators of reactance 12% each and one 5000 kVA generator of reactance 18%. The generators are connected to the station bus-bars from which load is taken through three 5000 kVA step-up transformers each having a reactance of 5%. Determine the maximum fault MVA which the circuit breakers on* (*i*) *low voltage side and* (*ii*) *high voltage side may have to deal with.*

Solution. Fig. 17.11 shows the single line diagram of the network. Let 10,000 kVA be the base kVA.

The percentage reactance of generators *A*, *B* and *C* and that of each transformer on the selected base kVA is

$$\% X_A = 12 \times 10{,}000/10{,}000 = 12\%$$
$$\% X_B = 12 \times 10{,}000/10{,}000 = 12\%$$
$$\% X_C = 18 \times 10{,}000/5{,}000 = 36\%$$
$$\% X_T = 5 \times 10{,}000/5{,}000 = 10\%$$

(*i*) When the fault occurs on the low voltage side of the transformer (point F_1 in Fig. 17.11), the reactance diagram at the selected base kVA will be as shown in Fig. 17.12. Obviously, the

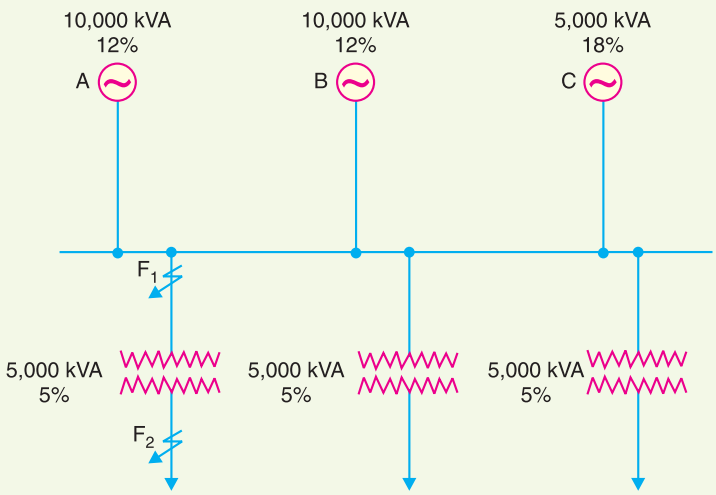

Fig. 17.11

total reactance upto the point of fault F_1 is the parallel combination of the reactances of the three alternators *i.e.*

Total % reactance form generator neutral upto fault point F_1

$$= \% X_A \parallel \% X_B \parallel \% X_C$$

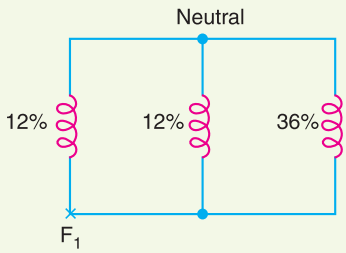

Fig. 17.12

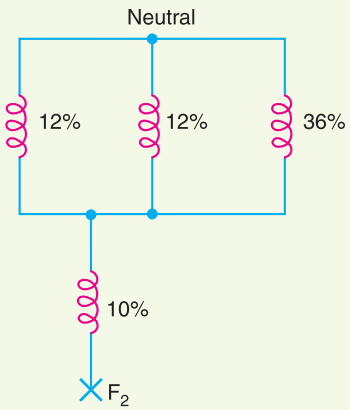

Fig. 17.13

$$= 12\% \parallel 12\% \parallel 36\% = \frac{6 \times 36}{6 + 36} = 5{\cdot}14\%$$

$$\therefore \qquad \text{Fault MVA} = 10{,}000 \times \frac{100}{5{\cdot}14} \times \frac{1}{1000} = \mathbf{194{\cdot}5}$$

(ii) When the fault occurs on the high voltage side of the transformer (point F_2 in Fig. 17.11), the reactance diagram will be as shown in Fig. 17.13.

Total % reactance from generator neutral upto fault point F_2

$$= 5{\cdot}14 + 10 = 15{\cdot}14\%$$

$$\therefore \qquad \text{Fault MVA} = 10{,}000 \times \frac{100}{15{\cdot}14} \times \frac{1}{1000} = \mathbf{66}$$

It may be noted that circuit breakers of lower ratings will be required on the high voltage side of the transformers.

Example 17.5. *The section bus-bars A and B are linked by a bus-bar reactor rated at 5000 kVA with 10% reactance. On bus-bar A, there are two generators each of 10,000 kVA with 10% reactance and on B two generators each of 8000 kVA with 12% reactance. Find the steady MVA fed into a dead short circuit between all phases on B with bus-bar reactor in the circuit.*

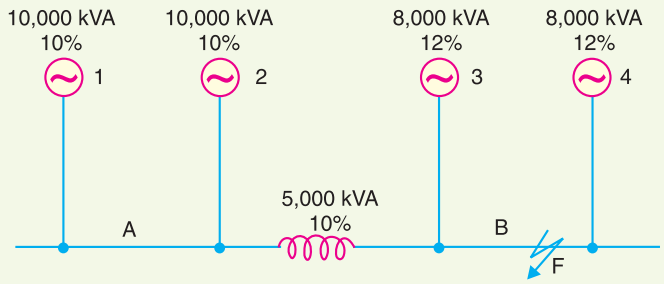

Fig. 17.14

Solution. Fig. 17.14 shows the single line diagram of the network.

Let 10,000 kVA be the base kVA.

% Reactance of generator 1 or 2 on the base kVA

$$= 10 \times 10{,}000/10{,}000 = 10\%$$

% Reactance of generator 3 or 4 on the base kVA

$$= 12 \times 10{,}000/8000 = 15\%$$

% Reactance of bus-bar reactor on the base kVA

$$= 10 \times 10{,}000/5000 = 20\%$$

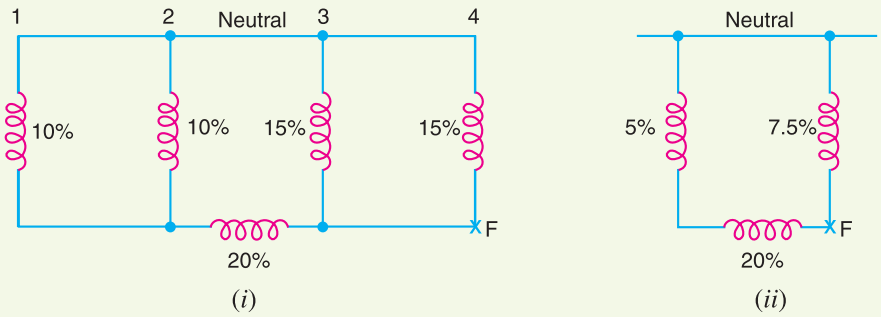

Fig. 17.15

When fault occurs on section *B* (point *F* in Fig. 17.14), the reactance diagram at the selected base kVA will be as shown in Fig. 17.15 (*i*). This series parallel circuit is further reduced to Fig. 17.15 (*ii*). Referring to Fig. 17.15 (*ii*), it is clear that reactance from generator neutral upto the fault point *F* is (5% + 20%) in parallel with 7·5% *i.e.*

Total % reactance from generator neutral upto fault point *F*

$$= (5\% + 20\%) \parallel 7{\cdot}5\%$$

$$= \frac{25 \times 7{\cdot}5}{25 + 7{\cdot}5} = 5{\cdot}77\%$$

$\therefore$ Fault kVA $= 10{,}000 \times 100/5{\cdot}77 = 1{,}73{,}310$

or Fault MVA $=$ **173·31**

Example 17.6. *A small generating station has two alternators of 3000 kVA and 4500 kVA and percentage reactances of 7% and 8% respectively. The circuit breakers have a rupturing capacity of 150 MVA. It is desired to extend the system by a supply from the grid via a transformer of 7500 kVA and 7·5% reactance. Find the reactance of the reactor connected in the bus-bar section to prevent the circuit breakers being overloaded, if a symmetrical short-circuit occurs on an outgoing feeder connected to it. Assume the bus voltage = 3300 V.*

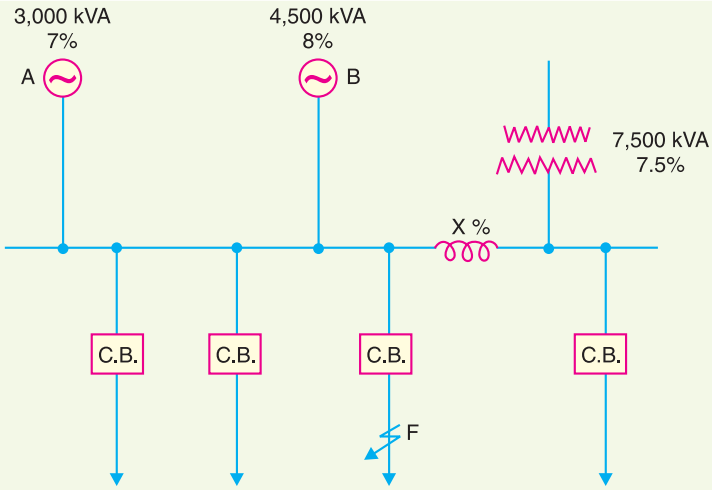

Fig. 17.16

Solution. Fig. 17.16 shows the single line diagram of the system.

Let 7500 kVA be the base kVA.

% Reactance of generator *A* on the base kVA

$$= 7 \times 7500/3000 = 17{\cdot}5\%$$

% Reactance of generator *B* on the base kVA

$$= 8 \times 7500/4500 = 13{\cdot}34\%$$

% Reactance of transformer on the base kVA

$$= 7{\cdot}5 \times 7500/7500 = 7{\cdot}5\%$$

Let the percentage reactance of the bus-bar reactor be *X*%. Then for 3-phase short-circuit fault on an outgoing feeder (point *F* in Fig. 17.16), the reactance diagram at the selected base kVA will be as shown in Fig. 17.17 (*i*). Reactances of 17·5% and 13·34% are in parallel and the equivalent reactance* = 7·57%. The circuit then reduces to Fig. 17.17 (*ii*).

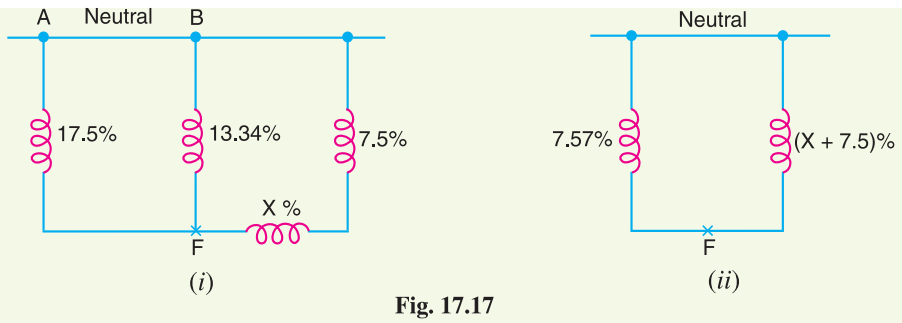

Fig. 17.17

* Equivalent reactance = $\dfrac{17{\cdot}5 \times 13{\cdot}34}{17{\cdot}5 + 13{\cdot}34}$ = 7·57%

Total % reactance from generator neutral to fault point F

$$= 7{\cdot}57\% \parallel (X + 7{\cdot}5)\%$$

$$= \frac{7{\cdot}57\,(X + 7{\cdot}5)}{X + 15{\cdot}07}\ \%$$

$$\text{Short-circuit kVA} = 7500 \times 100 \times \frac{X + 15{\cdot}07}{7{\cdot}57\,(X + 7{\cdot}5)}$$

But the short-circuit kVA should not exceed 150×10^3 kVA, the rupturing capacity of the breaker.

$$\therefore \quad 150 \times 10^3 = \frac{7500 \times 100 \times (X + 15{\cdot}07)}{7{\cdot}57\,(X + 7{\cdot}5)}$$

or $\quad 7{\cdot}57\,(X + 7{\cdot}5) = 5\,(X + 15{\cdot}07)$

or $\quad 7{\cdot}57\,X + 56{\cdot}77 = 5\,X + 75{\cdot}35$

or $\quad X = \dfrac{75{\cdot}35 - 56{\cdot}77}{7{\cdot}57 - 5} = 7{\cdot}23\%$

The %age reactance can be converted into reactance in ohms by the following expression :

$$\%\,X = \frac{(\text{kVA})\,X}{10\,(\text{kV})^2}$$

or $\quad 7{\cdot}23 = \dfrac{7500\,X}{10\,(3{\cdot}3)^2}$

or $\quad X = \dfrac{7{\cdot}23 \times 10 \times (3{\cdot}3)^2}{7500} = \mathbf{0{\cdot}105\,\Omega}$

i.e. reactance of the reactor per phase should be $0{\cdot}105\,\Omega$.

Example 17.7. *The estimated short-circuit MVA at the bus-bars of a generating station A is 1500 MVA and of another station B is 1200 MVA. The generated voltage at each station is 33 kV. If these stations are interconnected through a line having a reactance of 1Ω and negligible resistance, calculate the possible short-circuit MVA at both stations.*

Solution. Fig. 17.18 (*i*) shows the single line diagram of the system.

Let the base MVA be 100.

% Reactance of station A on the base MVA

$$\%\,X_A = \frac{\text{Base MVA}}{\text{Short-circuit MVA}} \times 100$$

$$= (100/1500) \times 100 = 6{\cdot}67\%$$

% Reactance of station B on the base MVA

$$\%\,X_B = (100/1200) \times 100 = 8{\cdot}33\%$$

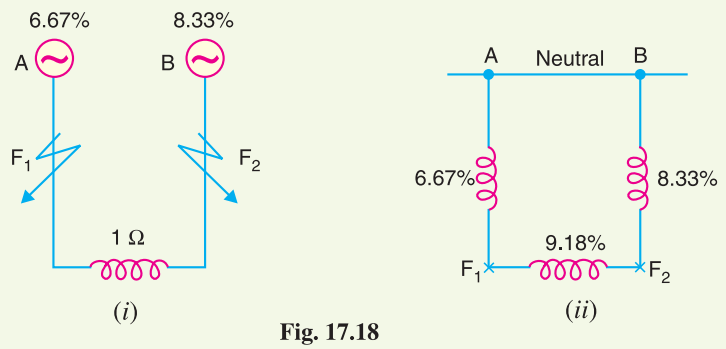

Fig. 17.18

% Reactance of interconnector on the base MVA

$$\% X_I = \frac{(\text{kVA})\, X}{10\,(\text{kV})^2} = \frac{(100 \times 10^3) \times 1}{10 \times (33)^2} = 9{\cdot}18\%$$

The reactance diagram is shown in Fig. 17.18 (*ii*).

Fault on station A. When a fault occurs on power station *A* (point F_1), the total percentage reactance from generator neutral upto fault point F_1 is the parallel combination of (8·33% + 9·18%) and 6·67% *i.e.*

Total % reactance upto fault point F_1

$$= \frac{17{\cdot}51 \times 6{\cdot}67}{17{\cdot}51 + 6{\cdot}67} = 4{\cdot}83\%$$

$$\therefore \quad \text{Short-circuit MVA} = \text{Base MVA} \times \frac{100}{\%\ \text{Reactance}}$$

$$= 100 \times 100/4{\cdot}83 = \mathbf{2070}$$

Fault on station B. When a fault occurs on power station *B* (point F_2), the total percentage reactance from generator neutral upto fault point F_2 is the parallel combination of (6·67% + 9·18%) and 8·33% *i.e.*

Total % reactance upto fault point F_2

$$= \frac{15{\cdot}85 \times 8{\cdot}33}{15{\cdot}85 + 8{\cdot}33} = 5{\cdot}46\%$$

$$\therefore \quad \text{Short-circuit MVA} = 100 \times 100/5{\cdot}46 = \mathbf{1831}$$

Example 17.8. *A generating station has three section bus-bars connected with a tie-bar through 6% reactors rated at 5000 kVA. Each generator is of 5000 kVA with 12% reactance and is connected to one section of bus-bars. Find the total steady input to a dead short-circuit between the lines on one of the sections of bus-bar (i) with reactors and (ii) without reactors.*

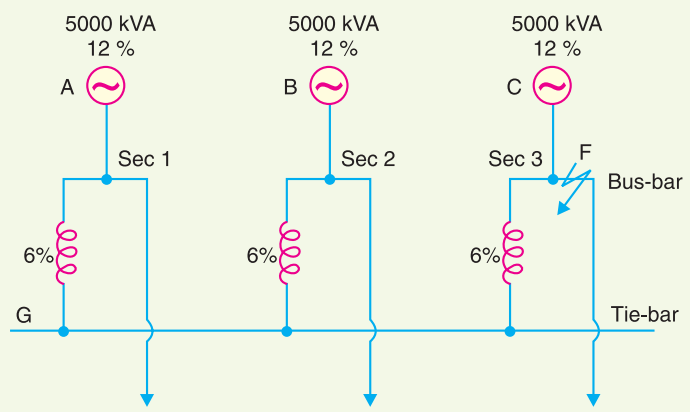

Fig. 17.19

Solution. Fig. 17.19 shows the single line diagram of the system. Let 5000 kVA be the base kVA. As generators and reactors are rated at this kVA, therefore, their percentage reactances remain the same.

***(i)* With reactors.** Suppose a 3-phase short-circuit fault occurs on section 3 of the bus-bar (point *F* in Fig. 17.19). The reactance diagram at the selected base kVA will be as shown in Fig. 17.20 (*i*). The equivalent reactance of the parallel branches is (18/2)% = 9% and the circuit reduces to Fig. 17.20 (*ii*).

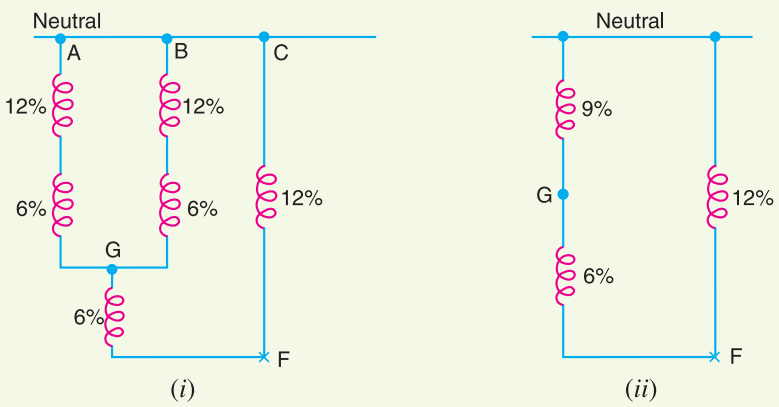

Fig. 17.20

Total % reactance from generator neutral upto fault point F

$$= (9\% + 6\%) \parallel 12\% = \frac{15 \times 12}{15 + 12} = 6{\cdot}67\%$$

$\therefore$ Short-circuit input $= 5000 \times 100/6{\cdot}67$

$= 74{,}962$ kVA = **74·962 MVA**

***(ii)* Without reactors.** Suppose no reactors are used. Then for a fault on section 3, the total reactance upto the fault point will be a parallel combination of the reactances of the three generators *i.e.*

Total % reactance upto fault point F

$= 12\% \parallel 12\% \parallel 12\% = 12/3 = 4\%$

$\therefore$ Short-circuit input $= 5000 \times 100/4 = 1{,}25{,}000$ kVA = **125 MVA**

Example 17.9. *A generating station is laid out as shown in Fig. 17.21. The ratings and percentage reactances of different elements are as indicated. If a 3-phase short-circuit occurs on any feeder near transformer secondary (e.g. point F), find the short-circuit MVA fed to the fault.*

Solution. Fig. 17.21 shows the single line diagram of the system.

Let us choose 5 MVA as the base value.

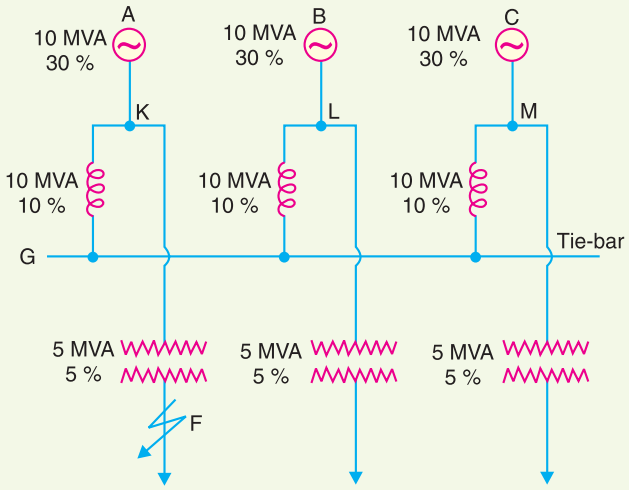

Fig. 17.21

%age reactance of each generator on the base MVA

$$= 30 \times 5/10 = 15\%$$

%age reactance of each reactor on the base MVA

$$= 10 \times 5/10 = 5\%$$

%age reactance of each transformer on the base MVA

$$= 5 \times 5/5 = 5\%$$

When a 3-phase short-circuit occurs at point F of the feeder near the secondary of the transformer, the reactance diagram at the selected base kVA will be as shown in Fig. 17.22 (*i*). This circuit can be further reduced to Fig. 17.22 (*ii*).

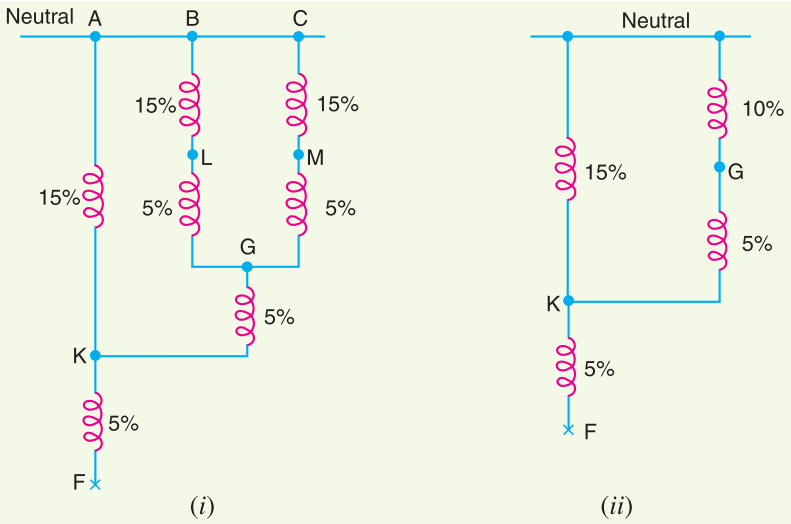

Fig. 17.22

Total %age reactance from generator neutral upto fault point *F*

$$= (10\% + 5\%) \parallel 15\% + 5\%$$

$$= \frac{15 \times 15}{15 + 15} + 5 = 7{\cdot}5 + 5 = 12{\cdot}5\%$$

$$\text{Short circuit MVA} = \text{Base MVA} \times \frac{100}{\%\ \text{Fault reactance}}$$

$$= 5 \times 100/12{\cdot}5 = \mathbf{40}$$

Example 17.10. *Show that a generating plant having N section bus-bars each rated at Q kVA with x% reactance, connected on the tie-bar system through bus-bar reactances of b% has a total short-circuit kVA on one section of*

$$\left[\frac{Q}{x} + \frac{Q\,(N-1)}{bN + x}\right] \times 100$$

If the section rating is 50,000 kVA ; x = 20% and b = 10%, find the short-circuit kVA with (i) 3 sections (ii) 9 sections and (iii) show that with a very large number of sections, the short-circuit kVA would not exceed 7,50,000 kVA.

Solution. Fig. 17.23 shows the single line diagram of a generating station having *N* bus-bar sections connected on the tie-bar system. Assume a symmetrical 3-phase short-circuit occurs on section 1 as indicated by point *F* in Fig. 17.23.

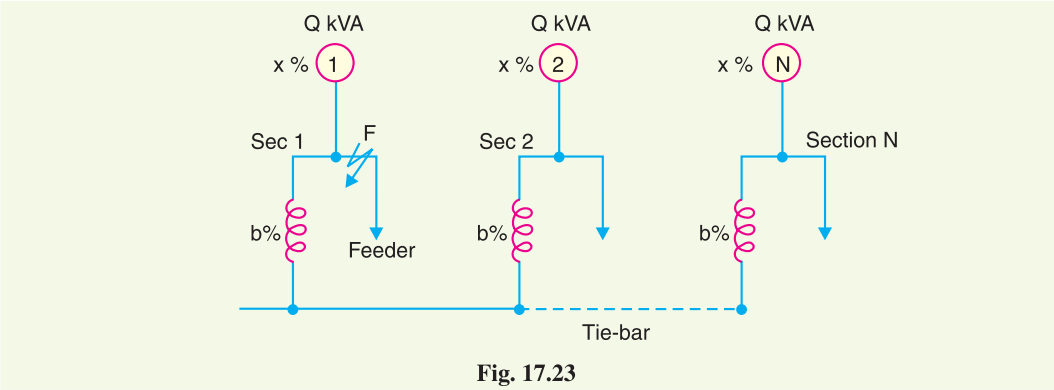

Fig. 17.23

The reactance diagram of the system is shown in Fig. 17.24. For a fault on section 1 (point F), the remaining $(N-1)$ sections are in parallel and their equivalent percentage reactance is $(x+b/N-1)\%$. The circuit of Fig. 17.24 is, therefore, reduced to the one shown in Fig. 17.25. Referring to Fig. 17.25, the total percentage reactance between the generator neutral and fault point F is given by :

% age reactance from generator neutral upto fault point F

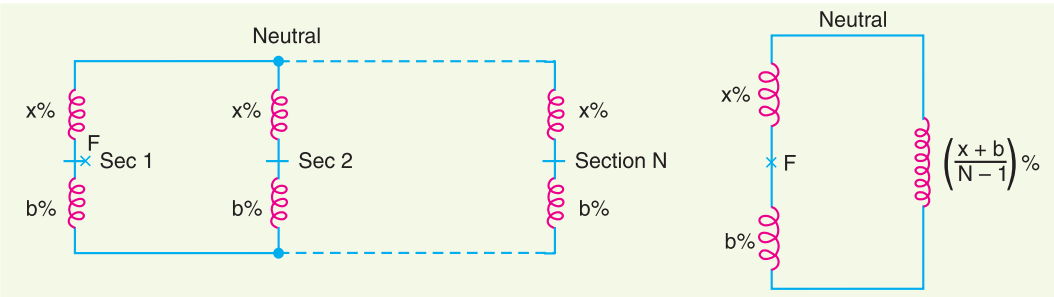

Fig. 17.24 **Fig. 17.25**

$$= \left\{b + \frac{x+b}{N-1}\right\}\% \,||\, x\% = \frac{\left[b + \frac{x+b}{N-1}\right]x}{b + \frac{x+b}{N-1} + x}\%$$

$$= \frac{x\,(x+bN)}{N(x+b)}\%$$

Suppose the base kVA is Q.

$$\therefore \quad \text{Short-circuit kVA} = Q \times 100 \times \frac{N\,(x+b)}{x\,(x+bN)}$$

$$= \left[\frac{Q}{x} + \frac{Q\,(N-1)}{bN+x}\right] \times 100 \qquad \text{... (i) Q.E.D.}$$

(i) With 3 sections, $N = 3$

$$\therefore \quad \text{Short-circuit kVA} = \left[\frac{50{,}000}{20} + \frac{50{,}000\,(3-1)}{10 \times 3 + 20}\right] \times 100 = \mathbf{4{,}50{,}000\ kVA}$$

(ii) With 9 sections, $N = 9$

$$\therefore \quad \text{Short-circuit kVA} = \left[\frac{50{,}000}{20} + \frac{50{,}000\,(9-1)}{10 \times 9 + 20}\right] \times 100 = \mathbf{6{,}13{,}636\ kVA}$$

(iii) When N is very large,

$$\text{Short-circuit kVA} = {}^{*}\left(\frac{Q}{x}+\frac{Q}{b}\right)\times 100 = \left(\frac{50,000}{20}+\frac{50,000}{10}\right)\times 100$$

$$= (2500 + 5000) \times 100$$

$$= \mathbf{7,50,000\ kVA}$$

Q.E.D.

Example 17.11. *The 33 kV bus-bars of a station are in two sections P and Q separated by a reactor. The section P is fed from four 10 MVA generators each having a reactance of 20%. The section Q is fed from the grid through a 50 MVA transformer of 10% reactance. The circuit breakers have a rupturing capacity of 500 MVA. Find the reactance of the reactor to prevent the circuit breakers from being overloaded if a symmetrical short-circuit occurs on an outgoing feeder connected to A. Take base MVA as 50 MVA.*

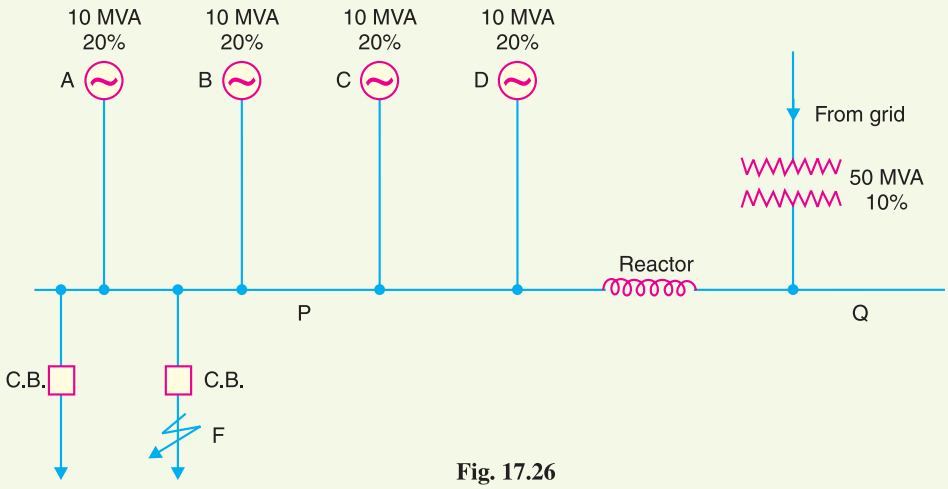

Fig. 17.26

Solution. Fig. 17.26 shows the single line diagram of the network. Suppose the fault occurs at point F on an outgoing feeder connected to section P. As per the given condition, the short-circuit MVA at F should not exceed 500 MVA.

% reactance of each of the generator on base MVA

$$= \frac{50}{10}\times 20 = 100\ \%$$

$$\therefore\quad \%\,X_A = 100\ \%\ ;\quad \%\,X_B = 100\ \%\ ;\quad \%\,X_C = 100\ \%\ ;\quad \%\,X_D = 100\ \%$$

% reactance of the transformer on base MVA is

$$\%\,X_T = \frac{50}{50}\times 10 = 10\%$$

Suppose the required reactance of the reactor is X % on 50 MVA base. When the fault occurs at point F, the reactance diagram at the selected base MVA will be as shown in Fig. 17.27 (*i*). Clearly, the reactances of the four generators are in parallel and their equivalent reactance = 100/4 = 25%. The circuit then reduces to that shown in Fig. 17.27 (*ii*).

---

* Referring to exp. (*i*) above, if N is very large, then x can be neglected as compared to bN. Also $N - 1$ may be taken as N.

$$\therefore\quad \text{Short-circuit kVA} = \left(\frac{Q}{x}+\frac{QN}{bN}\right)\times 100 = \left(\frac{Q}{x}+\frac{Q}{b}\right)\times 100$$

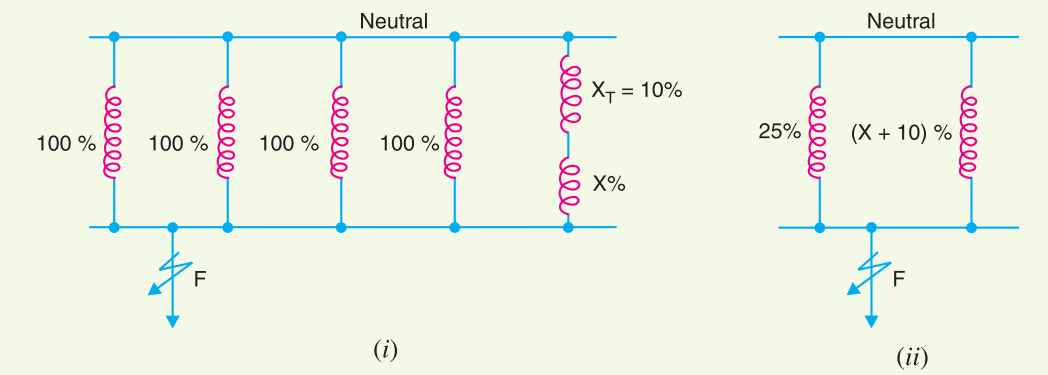

Fig. 17.27

Total percentage reactance from generator neutral to fault point F

$$= \frac{25(X+10)}{25+(X+10)} \qquad ...(i)$$

Now fault MVA at F is not to exceed 500 MVA.

$$\text{Fault MVA} = \text{Base MVA} \times \frac{100}{\text{Required \% reactance}}$$

or
$$500 = 50 \times \frac{100}{\text{Required \% reactance}}$$

$$\therefore \quad \text{Required \% reactance} = \frac{50 \times 100}{500} = 10\ \%$$

This means that total % reactance from generator neutral to fault point F should be 10 % *i.e.*

$$10 = \frac{25(X+10)}{25+(X+10)}$$

$$\therefore \quad X = \frac{100}{15}\ \%$$

$$\text{\% reactance} = \frac{(\text{Base kVA}) \times \text{Reactance in } \Omega}{10\ (\text{kV})^2}$$

or
$$\frac{100}{15} = \frac{(50 \times 10^3) \times \text{Reactance in } \Omega}{10 \times (33)^2}$$

$\therefore$ Reactance of the reactor in Ω

$$= 10 \times (33)^2 \times \frac{100}{15} \times \frac{1}{50 \times 10^3} = \mathbf{1{\cdot}452\ \Omega}$$

Example 17.12. *A 3-phase alternator can supply a maximum load of 5000 kVA at 6600 V. The machine has internal reactance of 6%. Find the reactance per phase of the limiting reactor if the steady apparent power (kVA) on short-circuit is not be exceed 5 times the full-load value.*

Solution. Let the base kVA be 5000 kVA. Let the % reactance of the reactor be X % on the base kVA. When short-circuit fault occurs, the total % reactance from generator neutral to fault point = $(X + 6)$ %. The short-circuit kVA is not to exceed 5×5000 kVA.

$$\text{Fault kVA} = \text{Base kVA} \times \frac{100}{\text{\% Reactance}}$$

or
$$5 \times 5000 = 5000 \times \frac{100}{(X+6)}$$

$\therefore \qquad X = 14\ \%$

It can be converted into Ω by the relation :

$$\% X = \frac{(\text{kVA}) \times \text{Reactance in } \Omega}{10\ (\text{kV})^2}$$

$$14 = \frac{5000 \times \text{Reactance in } \Omega}{10 \times (6 \cdot 6)^2}$$

∴ Reactance of the reactor in Ω

$$= \frac{14 \times 10 \times (6 \cdot 6)^2}{5000} = \mathbf{1 \cdot 22\ \Omega}$$

Example 17.13. *The bus-bars of a power station are in two sections P and Q separated by a reactor. Connected in section P are two 15 MVA generators of 12 % reactance each and to Q one 8 MVA generator of 10% reactance. The reactor is rated at 10 MVA and 15% reactance. Feeders are connected to bus-bar P through transformers, each rated at 5 MVA and 4% reactance. Determine the maximum short-circuit MVA with which circuit breakers on the outgoing side of the transformers have to deal.*

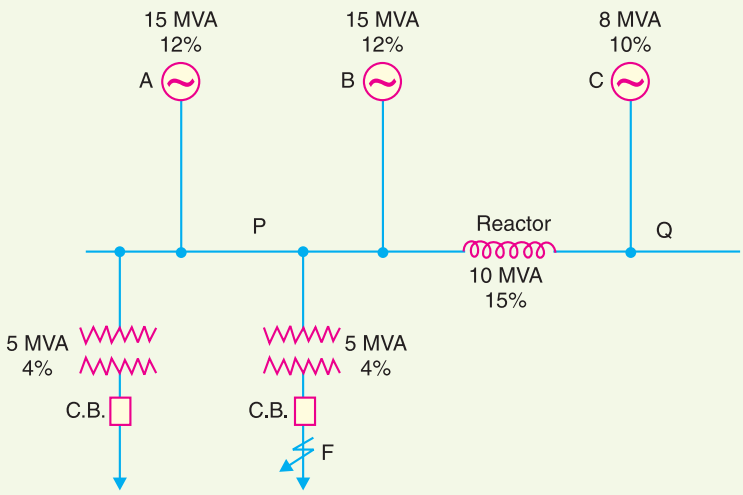

Fig. 17.28

Solution. Fig. 17.28 shows the single line diagram of the network. There may be several transformers but only two are shown for clarity of the figure. Suppose short-circuit fault occurs at point *F* on the outgoing side of one transformer as shown in Fig. 17.28. The circuit breaker will have to handle short-circuit MVA at point *F*.

Let 10 MVA be the base MVA. The percentage reactance of various elements on the selected base MVA will be :

$$\% X_A = \frac{10}{15} \times 12 = 8\ \%$$

$$\% X_B = \frac{10}{15} \times 12 = 8\ \%$$

$$\% X_C = \frac{10}{8} \times 10 = 12 \cdot 5\ \%$$

$$\% X_T = \frac{10}{5} \times 4 = 8\ \%$$

When fault occurs at point *F*, the reactance diagram at the selected base MVA will be as shown in Fig. 17.29 (*i*). The reactances of generators *A* and *B* are in parallel and their equivalent reactance = 8%/2 = 4%. The circuit then reduces to the one shown in Fig. 17.29 (*ii*). This further reduces to the one shown in Fig. 17.29 (*iii*).

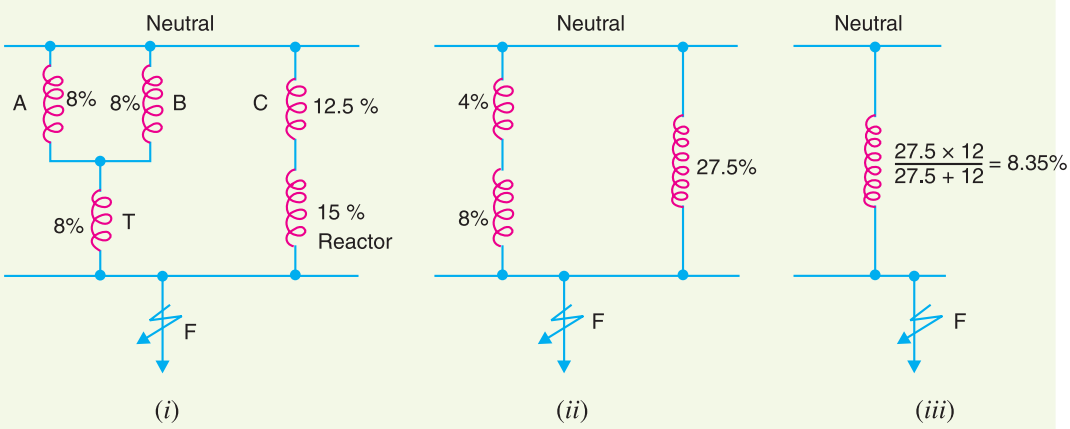

Fig. 17.29

∴ Total % reactance from generator neutral upto fault point *F*

$$= 12\ \% \parallel 27{\cdot}5\ \% = \frac{12 \times 27{\cdot}5}{12 + 27{\cdot}5} = 8{\cdot}35\ \%$$

$$\text{Fault MVA} = \text{Base MVA} \times \frac{100}{\%\ \text{Reactance}} = 10 \times \frac{100}{8{\cdot}35} = \mathbf{119{\cdot}8\ MVA}$$

Example 17.14. *A 10 MVA, 6·6 kV, 3-phase star-connected alternator having a reactance of 20% is connected through a 5 MVA, 6·6 kV/33 kV transformer of 10% reactance to a transmission line having a resistance and reactance per conductor per kilometre of 0·2 Ω and 1 Ω respectively. Fifty kilometres along the line, a short-circuit occurs between the three conductors. Find the current fed to the fault by the alternator.*

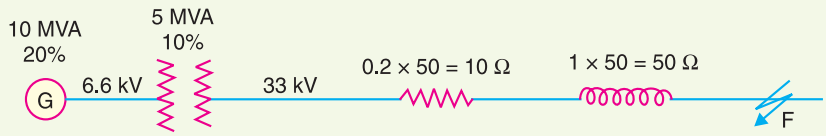

Fig. 17.30

Solution. Fig. 17.30 shows the single line diagram of the network. Let 10 MVA (= 10^4 kVA) be the base MVA.

% reactance of the alternator on base MVA is

$$\%\ X_A = \frac{10}{10} \times 20 = 20\ \%$$

% reactance of the transformer on base MVA is

$$\%\ X_T = \frac{10}{5} \times 10 = 20\ \%$$

% reactance of the transmission line is

$$\% X_L = \frac{(\text{kVA}) \times \text{reactance in } \Omega}{10\,(\text{kV})^2} = \frac{10^4 \times 50}{10 \times (33)^2} = 45{\cdot}9\%$$

% resistance of the transmission line is

$$\% R_L = \frac{(\text{kVA}) \times \text{resistance in } \Omega}{10\,(\text{kV})^2} = \frac{10^4 \times 10}{10 \times (33)^2} = 9{\cdot}18\ \%$$

When the symmetrical fault occurs at point F on the transmission line (50 km away), then,

Total % reactance upto the point of fault F

$$= \% X_A + \% X_T + \% X_L = 20\% + 20\% + 45{\cdot}9\% = 85{\cdot}9\%$$

$$\% \text{ resistance} = 9{\cdot}18\ \%$$

∴ % impedance from generator neutral upto fault point F

$$= \sqrt{(9{\cdot}18)^2 + (85{\cdot}9)^2} = 86{\cdot}4\ \%$$

$$\text{Short-circuit MVA} = 10 \times \frac{100}{86{\cdot}4} = 11{\cdot}57 \text{ MVA}$$

∴ Short-circuit current fed to the fault by the alternator is

$$I_{SC} = \frac{11{\cdot}57 \times 10^6}{\sqrt{3} \times 6{\cdot}6 \times 1000} = \mathbf{1012\ A}$$

Example 17.15. *An 11 kV generating station has four identical 3-phase alternators A, B, C and D, each of 10 MVA capacity and 12% reactance. There are two sections of bus-bar, P and Q linked by a reactor rated at 10 MVA with 24% reactance. Alternators A and B are connected to bus-bar section P and alternators C and D to bus-bar section Q. From each section, load is taken through a number of 6 MVA, 11 kV/66 kV step-up transformers, each having a reactance of 3%. Calculate the current fed into fault if a short-circuit occurs on all phases near the high-voltage terminals of one of the transformers at the bus-bar section Q.*

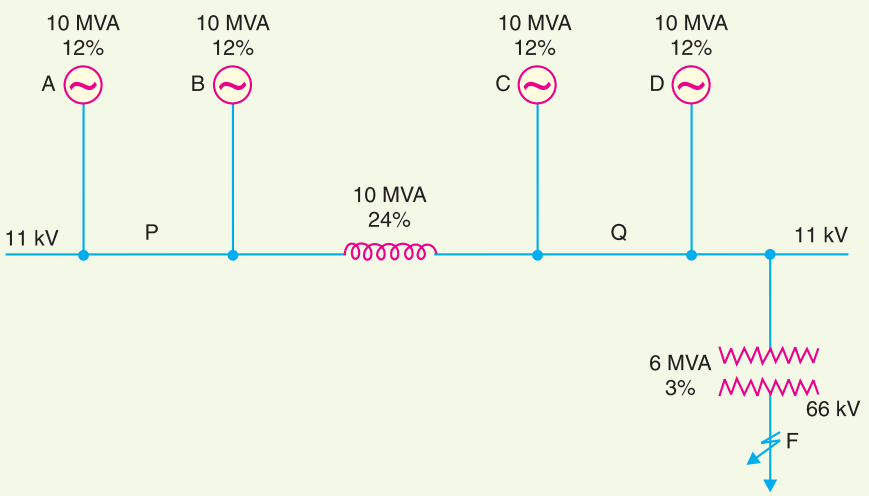

Fig. 17.31

Solution. Fig. 17.31 shows the single line diagram of the network. Let 10 MVA be the base MVA.

% reactance of each generator (A, B, C and D) on the base MVA

$$= \frac{10}{10} \times 12 = 12\%$$

% reactance of the reactor on the base MVA

$$= \frac{10}{10} \times 24 = 24\%$$

% reactance of the transformer on the base MVA

$$= \frac{10}{6} \times 3 = 5\%$$

When fault occurs at point F, the reactance diagram on the selected base MVA will be as shown in Fig. 17.32 (*i*). This further reduces to the circuit shown in Fig. 17.32 (*ii*).

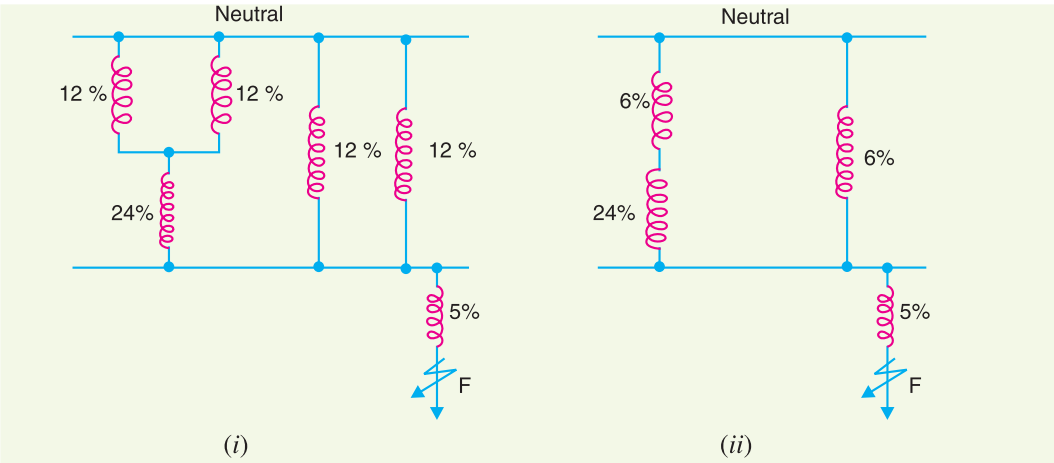

Fig. 17.32

∴ % reactance from generator neutral upto fault point F

$$= \frac{30 \times 6}{30 + 6} + 5 = 5 + 5 = 10\%$$

$$\text{Fault MVA} = 10 \times \frac{100}{10} = 100 \text{ MVA}$$

Short-circuit current, $I_{SC} = \dfrac{100 \times 10^6}{\sqrt{3} \times 66000} = \mathbf{875\ A}$

Oil circuit breaker

TUTORIAL PROBLEMS

1. A 3-phase, 30 MVA, 33 kV alternator has internal reactance of 4% and negligible resistance. Find the external reactance per phase to be connected in series with the alternator so that steady current on short-circuit does not exceed 10 times the full load current. **[2·178 Ω]**
2. A 3-phase transmission line operating at 33 kV and having a resistance of 5 Ω and reactance of 20 Ω is connected to the generating station through 15,000 kVA step-up transformer. Connected to the bus-bar are two alternators, one of 10,000 kVA with 10% reactance and another of 5000 kVA with 7·5% reactance. Calculate the short-circuit kVA fed to the symmetrical fault between phases if it occurs
   (*i*) at the load end of transmission line
   (*ii*) at the high voltage terminals of the transformer
   [(*i*) 44,500 kVA (*ii*) 100,000 kVA]
3. The plant capacity of a 3-phase generating station consists of two 8 MVA generators of reactance 14·5% each and one 4 MVA generator of reactance 9·5%. These are connected to a common bus-bar from which loads are taken through a number of 3 MVA step-up transformers each having 4% reactance. Determine the MVA rating of the circuit breakers on (*i*) L.V. side and (*ii*) H.V. side. Reactances given are based on the MVA of each equipment. **[(*i*) 15·24 MVA (*ii*) 50·25 MVA]**
4. The 33 kV bus-bar of a station are in two sections *A* and *B* separated by a reactor. Section *A* is fed from four 10 MVA generators each having 20% reactance and section *B* is fed from the grid through 50 MVA transformer of 10% reactance. The circuit breakers have rupturing capacity of 500 MVA. Find the reactance of the reactor to prevent the circuit breakers being overloaded if a symmetrical short-circuit occurs on an outgoing feeder connected to it. **[1·45 Ω]**
5. A generating station has five section bus-bar connected with a tie-bar through 7·5% reactors rated at 3000 kVA. Each generator is of 3000 kVA with 10% reactance and is connected to one section of the bus-bar. Find the total steady input to a dead short-circuit between the lines on one of the sections of the bus-bars (*i*) with and (*ii*) without reactors. **[(*i*) 55·3 MVA (*ii*) 150 MVA]**
6. A generating station has four bus-bar sections. Each section is connected to tie-bar though 20% reactors rated at 200 MVA. Generators of total capacity 100 MVA and 20% reactance are connected to each bus-bar section. Calculate the MVA fed to a fault under short-circuit condition one one of the bus-bars. **[1000 MVA]**

SELF - TEST

1. **Fill in the blanks by inserting appropriate words/figures.**
   (*i*) When a short-circuit occurs, a ..... current flows through the system.
   (*ii*) The most serious result of a major uncleared short-circuit fault is the .....
   (*iii*) When all the three phases are short-circuited, it gives rise to ..... currents.
   (*iv*) The rating of a circuit breaker is generally determined on the basis of ..... short circuit currents.
   (*v*) The most common type of fault in overhead lines is .....
   (*vi*) The ..... short-circuit fault gives very heavy duty on the circuit breaker.
   (*vii*) If the % age reactance upto the fault point is 20%, then short-circuit current will be ..... times the full-load current.
   (*viii*) A 1000 kVA transformer with 5% reactance will have a reactance of ..... at 2000 kVA base.
   (*ix*) Short-circuit kVA is obtained by multiplying the base kVA by .....
   (*x*) Reactors are used at various points in the power system to .....
2. **Pick up the correct words/figures from the brackets and fill in the blanks.**
   (*i*) ..... fault gives rise to symmetrical fault currents.
   (*single phase to ground, phase to phase, 3-phase short-circuit*)
   (*ii*) Percentage reactances ..... as they are referred through transformers.
   (*remain unchanged, are changed*)

(*iii*) If the % age reactance of the system upto the fault point is 20% and the base kVA is 10,000, then short-circuit kVA is ..... (*50,000, 10,000, 2,000*)

(*iv*) The use of reactors permits installation of circuit breakers of ..... ratings. (*lower, higher*)

(*v*) A 20,000 kVA transformer with 10% reactance will have a reactance of ..... at 10,000 kVA base. (*5%, 20%, 10%*)

ANSWERS TO SELF-TEST

1. (*i*) heavy (*ii*) fire (*iii*) symmetrical fault (*iv*) symmetrical (*v*) phase-to-ground fault (*vi*) 3-phase (*vii*) 5 (*viii*) 10% (*ix*) 100/% *X* (*x*) limit short-circuit current

2. (*i*) 3-phase short-circuit (*ii*) remain unchanged (*iii*) 50,000 (*iv*) lower (*v*) 5%

CHAPTER REVIEW TOPICS

1. What do you understand by a short-circuit ? Discuss the possible causes of short-circuit in the power system.

2. Explain the harmful effects of short-circuit fault on the power system.

3. What is the importance of short-circuit calculations ?

4. Discuss the possible faults on overhead lines.

5. What do you understand by percentage reactance ? Why do we prefer to express the reactances of various elements in percentage values for short-circuit calculations ?

6. What is the importance of base kVA in short-circuit calculations ?

7. Why do we use reactors in the power system ? Discuss their advantages.

8. Explain the various methods of connecting short-circuit current limiting reactors in the power system.

DISCUSSION QUESTIONS

1. Why do we choose a base kVA in short-circuit calculations ?

2. What is the advantage of expressing reactances in percentage values ?

3. Why do we decide the rating of a circuit breaker on the basis of symmetrical short-circuit currents ?

4. Will the value of short-circuit current change if we take different base kVAs' ? Explain your answer.

5. Can feeder reactors permit the use of circuit breakers of lower ratings ?

GO To FIRST