CONTENTS

CHAPTER

23

Protection of Busbars and Lines

23.1 Busbar Protection

23.2 Protection of Lines

23.3 Time-Graded Overcurrent Protection

23.4 Differential Pilot-Wire Protection

23.5 Distance Protection

Introduction

Busbars and lines are important elements of electric power system and require the immediate attention of protection engineers for safeguards against the possible faults occurring on them. The methods used for the protection of generators and transformers can also be employed, with slight modifications, for the busbars and lines. The modifications are necessary to cope with the protection problems arising out of greater length of lines and a large number of circuits connected to a busbar. Although differential protection can be used, it becomes too expensive for longer lines due to the greater length of pilot wires required. Fortunately, less expensive methods are available which are reasonably effective in providing protection for the busbars and lines. In this chapter, we shall focus our attention on the various methods of protection of busbars and lines.

23.1 Busbar Protection

Busbars in the generating stations and sub-stations form important link between the incoming and outgoing circuits. If a fault occurs on a busbar, considerable damage and disruption of supply will occur unless some form of quick-acting automatic

CONTENTS

protection is provided to isolate the faulty busbar. The busbar zone, for the purpose of protection, includes not only the busbars themselves but also the isolating switches, circuit breakers and the associated connections. In the event of fault on any section of the busbar, all the circuit equipments connected to that section must be tripped out to give complete isolation.

The standard of construction for busbars has been very high, with the result that bus faults are extremely rare. However, the possibility of damage and service interruption from even a rare bus fault is so great that more attention is now given to this form of protection. Improved relaying methods have been developed, reducing the possibility of incorrect operation. The two most commonly used schemes for busbar protection are :

(i) Differential protection ***(ii)*** Fault bus protection

(i) **Differential protection.** The basic method for busbar protection is the differential scheme in which currents entering and leaving the bus are totalised. During normal load condition, the sum of these currents is equal to zero. When a fault occurs, the fault current upsets the balance and produces a differential current to operate a relay.

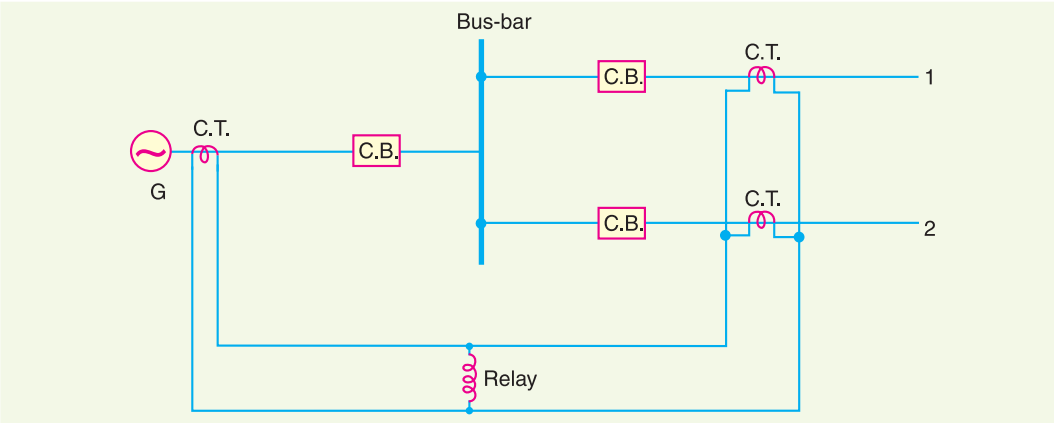

Fig. 23.1

Fig. 23.1 shows the single line diagram of current differential scheme for a station busbar. The busbar is fed by a generator and supplies load to two lines. The secondaries of current transformers in the generator lead, in line 1 and in line 2 are all connected in parallel. The protective relay is connected across this parallel connection. All *CT*s must be of the same ratio in the scheme regardless of the capacities of the various circuits. Under normal load conditions or external fault conditions, the sum of the currents entering the bus is equal to those leaving it and no current flows through the relay. If a fault occurs within the protected zone, the currents entering the bus will no longer be equal to those leaving it. The difference of these currents will flow through the relay and cause the opening of the generator, circuit breaker and each of the line circuit breakers.

(ii) **Fault Bus protection.** It is possible to design a station so that the faults that develop are mostly earth-faults. This can be achieved by providing earthed metal barrier (known as *fault bus*) surrounding each conductor throughout its entire length in the bus structure. With this arrangement, every fault that might occur must involve a connection between a conductor and an earthed metal part. By directing the flow of earth-fault current, it is possible to detect the faults and determine their location. This type of protection is known as fault bus protection.

Fig. 23.2 show the schematic arrangement of fault bus protection. The metal supporting structure or fault bus is earthed through a current transformer. A relay is connected across the secondary of this CT. Under normal operating conditions, there is no current flow from fault bus to ground and the relay remains inoperative. A fault involving a connection between a conductor and earthed sup-

porting structure will result in current flow to ground through the fault bus, causing the relay to operate. The operation of relay will trip all breakers connecting equipment to the bus.

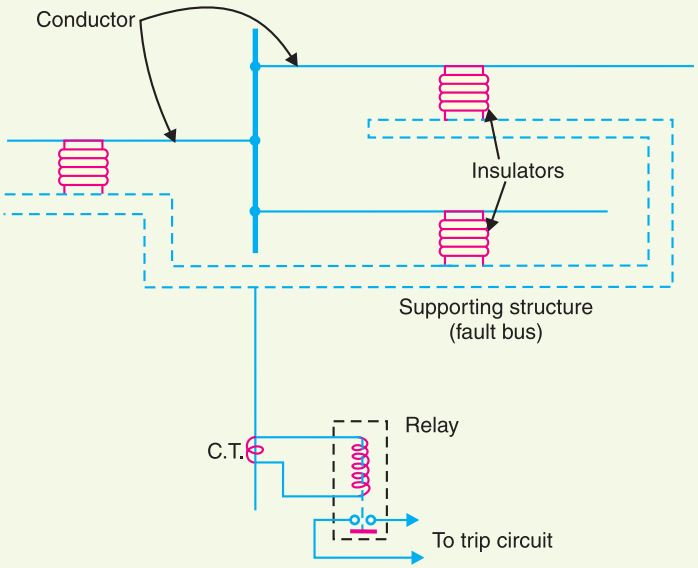

Fig. 23.2

23.2 Protection of Lines

The probability of faults occurring on the lines is much more due to their greater length and exposure to atmospheric conditions. This has called for many protective schemes which have no application to the comparatively simple cases of alternators and transformers. The requirements of line protection are :

(*i*) In the event of a short-circuit, the circuit breaker closest to the fault should open, all other circuit breakers remaining in a closed position.

(*ii*) In case the nearest breaker to the fault fails to open, back-up protection should be provided by the adjacent circuit breakers.

(*iii*) The relay operating time should be just as short as possible in order to preserve system stability, without unnecessary tripping of circuits.

The protection of lines presents a problem quite different from the protection of station apparatus such as generators, transformers and busbars. While differential protection is ideal method for lines, it is much more expensive to use. The two ends of a line may be several kilometres apart and to compare the two currents, a costly pilot-wire circuit is required. This expense may be justified but in general less costly methods are used. The common methods of line protection are :

(*i*) Time-graded overcurrent protection

(*ii*) Differential protection

(*iii*) Distance protection

Fig. 23.3

Fig. 23.3 shows the symbols indicating the various types of relays.

23.3 Time-Graded Overcurrent Protection

In this scheme of overcurrent protection, time discrimination is incorporated. In other words, the time setting of relays is so graded that in the event of fault, the smallest possible part of the system is isolated. We shall discuss a few important cases.

1. Radial feeder. The main characteristic of a radial system is that power can flow only in one direction, from generator or supply end to the load. It has the disadvantage that continuity of supply cannot be maintained at the receiving end in the event of fault. Time-graded protection of a radial feeder can be achieved by using (*i*) definite time relays and (*ii*) inverse time relays.

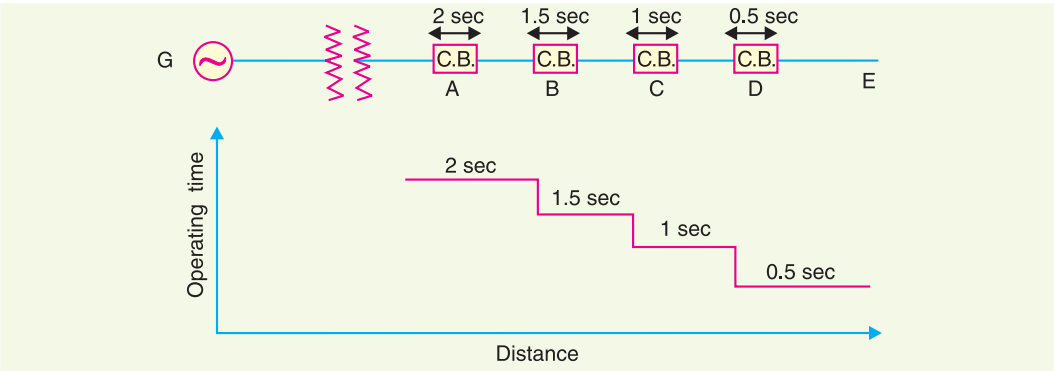

Fig. 23.4

(i) *Using definite time relays.* Fig. 23.4 shows the overcurrent protection of a radial feeder by definite time relays. The time of operation of each relay is fixed and is independent of the operating current. Thus relay *D* has an operating time of 0·5 second while for other relays, time delay* is successively increased by 0·5 second. If a fault occurs in the section *DE*, it will be cleared in 0·5 second by the relay and circuit breaker at *D* because all other relays have higher operating time. In this way only section *DE* of the system will be isolated. If the relay at *D* fails to trip, the relay at *C* will operate after a time delay of 0·5 second *i.e.* after 1 second from the occurrence of fault.

The disadvantage of this system is that if there are a number of feeders in series, the tripping time for faults near the supply end becomes high (2 seconds in this case). However, in most cases, it is necessary to limit the maximum tripping time to 2 seconds. This disadvantage can be overcome to a reasonable extent by using inverse-time relays.

(ii) *Using inverse time relays.* Fig. 23.5 shows overcurrent protection of a radial feeder using

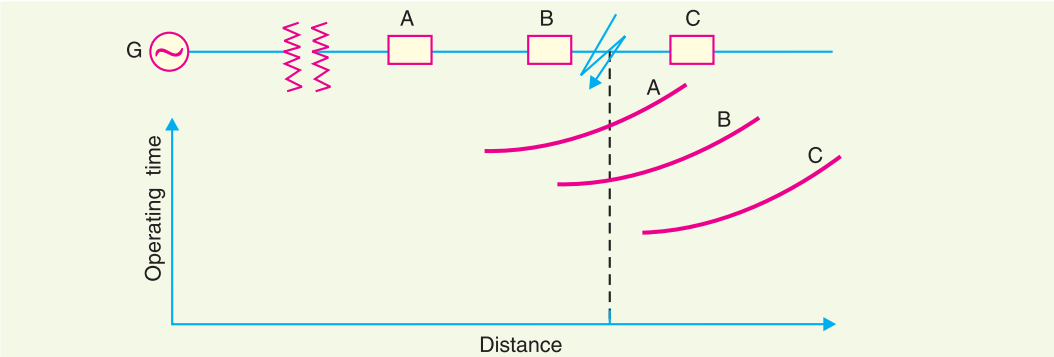

Fig. 23.5

* The amount of time delay depends upon the speed of breaker tripping. Sufficient time delay must be allowed to permit the breaker on the faulted section to clear the fault before the next relay in the sequence trips. The time-delay usually varies from 0·25 second to 0·5 second.

inverse time relays in which operating time is inversely proportional to the operating current. With this arrangement, the farther the circuit breaker from the generating station, the shorter is its relay operating time.

The three relays at *A*, *B* and *C* are assumed to have inverse-time characteristics. A fault in section *BC* will give relay times which will allow breaker at *B* to trip out before the breaker at *A*.

Inverse Time Relay

2. Parallel feeders. Where continuity of supply is particularly necessary, two parallel feeders may be installed. If a fault occurs on one feeder, it can be disconnected from the system and continuity of supply can be maintained from the other feeder. The parallel feeders cannot* be protected by non-directional overcurrent relays only. It is necessary to use directional relays also and to grade the time setting of relays for selective trippings.

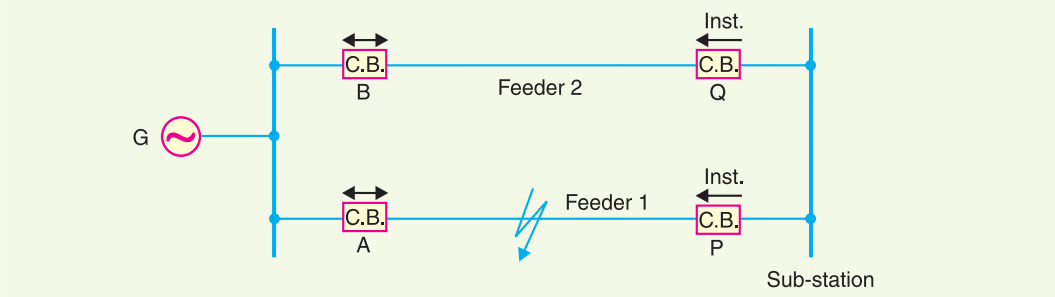

Fig. 23.6

Fig. 23.6 shows the system where two feeders are connected in parallel between the generating station and the sub-station. The protection of this system requires that

(i) each feeder has a non-directional overcurrent relay at the generator end. These relays should have inverse-time characteristic.

(ii) each feeder has a reverse power or directional relay at the sub-station end. These relays should be instantaneous type and operate only when power flows in the reverse direction *i.e.* in the direction of arrow at *P* and *Q*.

Suppose an earth fault occurs on feeder 1 as shown in Fig. 23.6. It is desired that only circuit breakers at *A* and *P* should open to clear the fault whereas feeder 2 should remain intact to maintain the continuity of supply. In fact, the above arrangement accomplishes this job. The shown fault is fed *via* two routes, *viz.*

(a) directly from feeder 1 *via* the relay *A*

(b) from feeder 2 *via B*, *Q*, sub-station and *P*

Therefore, power flow in relay *Q* will be in normal direction but is reversed in the relay *P*. This causes the opening of circuit breaker at *P*. Also the relay *A* will operate while relay *B* remains inop-

* Referring to Fig. 23.6, suppose relays at *P* and *Q* are non-directional type and their time settings are lower than relays at *A* and *B*. When a fault occurs at the shown point, the relay at *Q* will operate first and disconnect the feeder 2, and then feeder 1 will be cut off. Thus even the sound feeder (No. 2) is isolated.

erative. It is because these relays have inverse-time characteristics and current flowing in relay *A* is in excess of that flowing in relay *B*. In this way only the faulty feeder is isolated.

3. Ring main system. In this system, various power stations or sub-stations are interconnected by alternate routes, thus forming a closed ring. In case of damage to any section of the ring, that section may be disconnected for repairs, and power will be supplied from both ends of the ring, thereby maintaining continuity of supply.

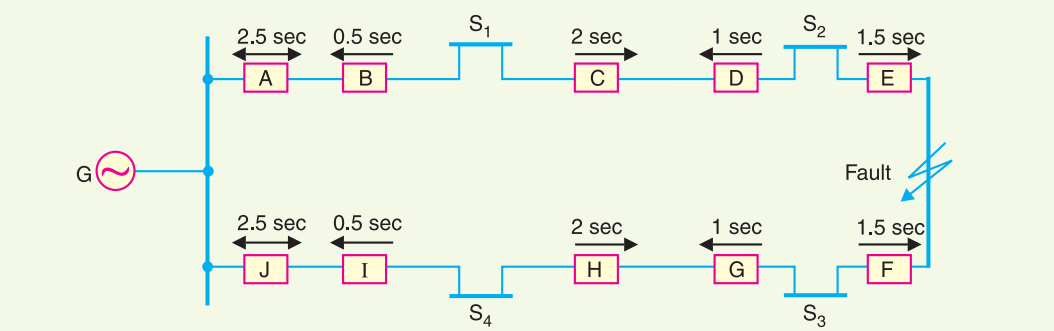

Fig. 23.7

Fig. 23.7 shows the single line diagram of a typical ring main system consisting of one generator *G* supplying four sub-stations S_1, S_2, S_3 and S_4. In this arrangement, power can flow in both directions under fault conditions. Therefore, it is necessary to grade in both directions round the ring and also to use directional relays. In order that only faulty section of the ring is isolated under fault conditions, the types of relays and their time settings should be as follows :

(i) The two lines leaving the generating station should be equipped with non-directional overcurrent relays (relays at *A* and *J* in this case).

(ii) At each sub-station, reverse power or directional relays should be placed in both incoming and outgoing lines (relays at *B*, *C*, *D*, *E*, *F*, *G*, *H* and *I* in this case).

(iii) There should be proper relative time-setting of the relays. As an example, going round the loop $G\,S_1\,S_2\,S_3\,S_4\,G$; the outgoing relays (*viz* at *A*, *C*, *E*, *G* and *I*) are set with decreasing time limits *e.g.*

$A = 2{\cdot}5$ sec, $C = 2$ sec, $E = 1{\cdot}5$ sec $G = 1$ sec and $I = 0{\cdot}5$ sec

Similarly, going round the loop in the opposite direction (*i.e.* along $G\,S_4\,S_3\,S_2\,S_1\,G$), the *outgoing relays* (*J*, *H*, *F*, *D* and *B*) are also set with a decreasing time limit *e.g.*

$J = 2{\cdot}5$ sec, $H = 2$ sec, $F = 1{\cdot}5$ sec, $D = 1$ sec, $B = 0{\cdot}5$ sec.

Suppose a short circuit occurs at the point as shown in Fig. 23.7. In order to ensure selectivity, it is desired that only circuit breakers at *E* and *F* should open to clear the fault whereas other sections of the ring should be intact to maintain continuity of supply. In fact, the above arrangement accomplishes this job. The power will be fed to the fault *via* two routes *viz* (*i*) from *G* around S_1 and S_2 and (*ii*) from *G* around S_4 and S_3. It is clear that relays at *A*, *B*, *C* and *D* as well as *J*, *I*, *H* and *G* will not trip. Therefore, only relays at *E* and *F* will operate before any other relay operates because of their lower time-setting.

23.4 Differential Pilot-Wire Protection

The differential pilot-wire protection is based on the principle that under normal conditions, the current entering one end of a line is equal to that leaving the other end. As soon as a fault occurs between the two ends, this condition no longer holds and the difference of incoming and outgoing currents is arranged to flow through a relay which operates the circuit breaker to isolate the faulty line. There are several differential protection schemes in use for the lines. However, only the follow-

ing two schemes will be discussed :

1. Merz-Price voltage balance system
2. Translay scheme

1. Merz-Price voltage balance system. Fig. 23.8 shows the single line diagram of Merz-Price voltage balance system for the protection of a 3-phase line. Identical current transformers are placed in each phase at both ends of the line. The pair of *CT*s in each line is connected in series with a relay in such a way that under normal conditions, their secondary voltages are equal and in opposition *i.e.* they balance each other.

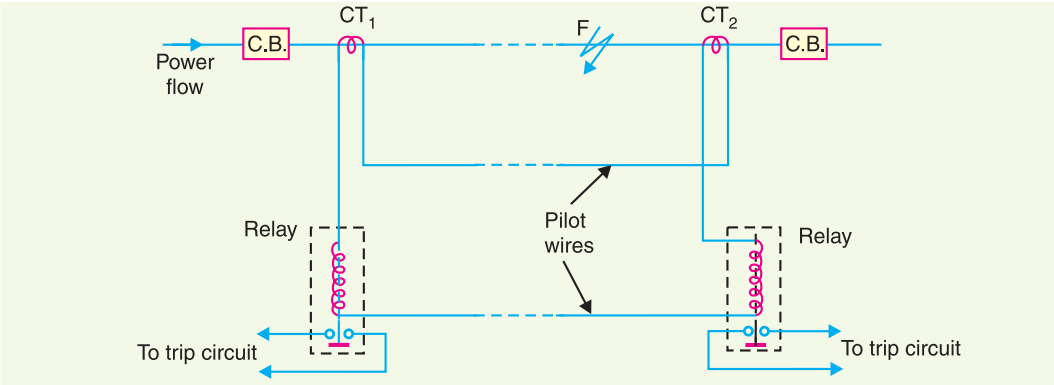

Fig. 23.8

Under healthy conditions, current entering the line at one-end is equal to that leaving it at the other end. Therefore, equal and opposite voltages are induced in the secondaries of the *CT*s at the two ends of the line. The result is that no current flows through the relays. Suppose a fault occurs at point *F* on the line as shown in Fig. 23.8. This will cause a greater current to flow through CT_1 than through CT_2. Consequently, their secondary voltages become unequal and circulating current flows through the pilot wires and relays. The circuit breakers at both ends of the line will trip out and the faulty line will be isolated.

Fig. 23.9 shows the connections of Merz-Price voltage balance scheme for all the three phases of the line.

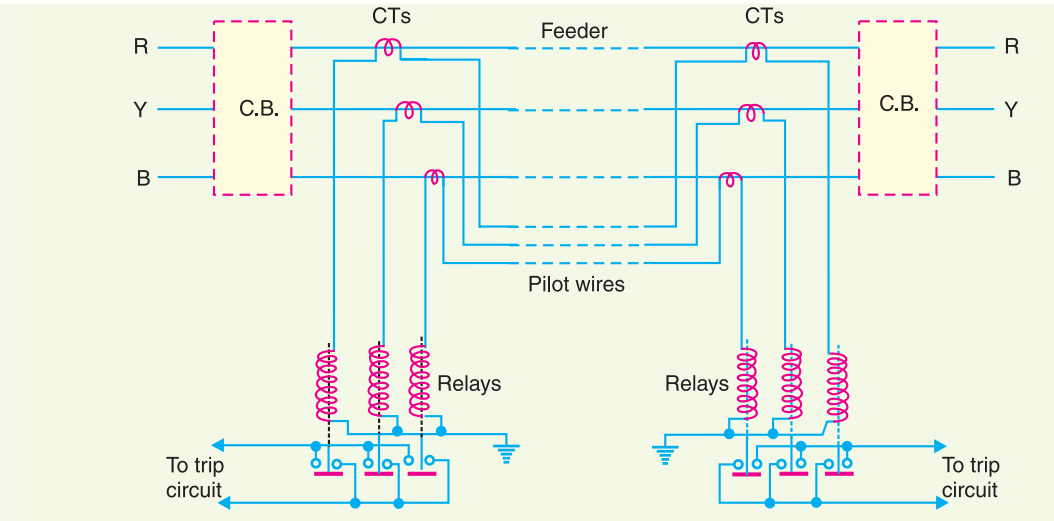

Fig. 23.9

Advantages

(*i*) This system can be used for ring mains as well as parallel feeders.

(*ii*) This system provides instantaneous protection for ground faults. This decreases the possibility of these faults involving other phases.

(*iii*) This system provides instantaneous relaying which reduces the amount of damage to overhead conductors resulting from arcing faults.

Disadvantages

(*i*) Accurate matching of current transformers is very essential.

(*ii*) If there is a break in the pilot-wire circuit, the system will not operate.

(*iii*) This system is very expensive owing to the greater length of pilot wires required.

(*iv*) In case of long lines, charging current due to pilot-wire capacitance* effects may be sufficient to cause relay operation even under normal conditions.

(*v*) This system cannot be used for line voltages beyond 33 kV because of constructional difficulties in matching the current transformers.

2. Translay scheme. This system is similar to voltage balance system except that here balance or opposition is between the voltages induced in the secondary windings wound on the relay magnets and *not* between the secondary voltages of the line current transformers. This permits to use current transformers of normal design and eliminates one of the most serious limitations of original voltage balance system, namely ; its limitation to the system operating at voltages not exceeding 33 kV.

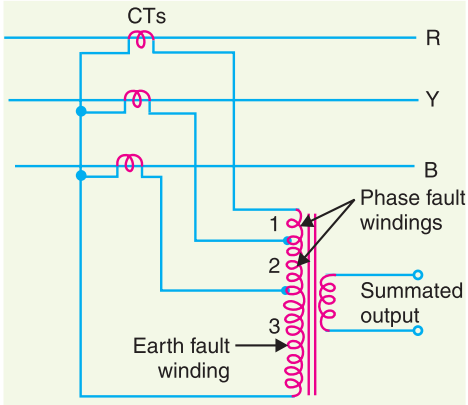

Fig. 23.10

The application of Translay scheme for a single phase line has already been discussed in Art. 21.20. This can be extended to 3-phase system by applying one relay at each end of each phase of the 3-phase line. However, it is possible to make further simplification by combining currents derived from all phases in a single relay at each end, using the principle of *summation transformer* (See Fig. 23.10). A summation transformer is a device that reproduces the polyphase line currents as a single-phase quantity. The three lines *CT*s are connected to the tapped primary of summation transformer. Each line *CT* energises a different number of turns (from line to neutral) with a resulting single phase output. The use of summation transformer permits two advantages *viz* (*i*) primary windings 1 and 2 can be used for phase faults whereas winding 3 can be used for earth fault (*ii*) the number of pilot wires required is only two.

Schematic arrangement. The Translay scheme for the protection of a 3-phase line is shown in Fig. 23.11. The relays used in the scheme are essentially overcurrent induction type relays. Each relay has two electromagnetic elements. The upper element carries a winding (11 or 11 *a*) which is energised as a summation transformer from the secondaries of the line *CT*s connected in the phases of the line to be protected. The upper element also carries a secondary winding (12 or 12 *a*) which is connected is series with the operating winding (13 or 13 *a*) on the lower magnet. The secondary windings 12, 12 *a* and operating windings 13, 13 *a* are connected in series in such a way that voltages induced in them oppose each other. Note that relay discs and tripping circuits have been omitted in the diagram for clarity.

* This drawback is overcome in the **Beard-Hunter system.** In this system, each pilot-wire is surrounded by an insulated metallic sheath with a break half-way along its length. Half the pilot charging current thus comes from the sending end and half from the receiving end. Therefore, voltage applied to the relay at the sending end is balanced by an equal voltage at the receiving end.

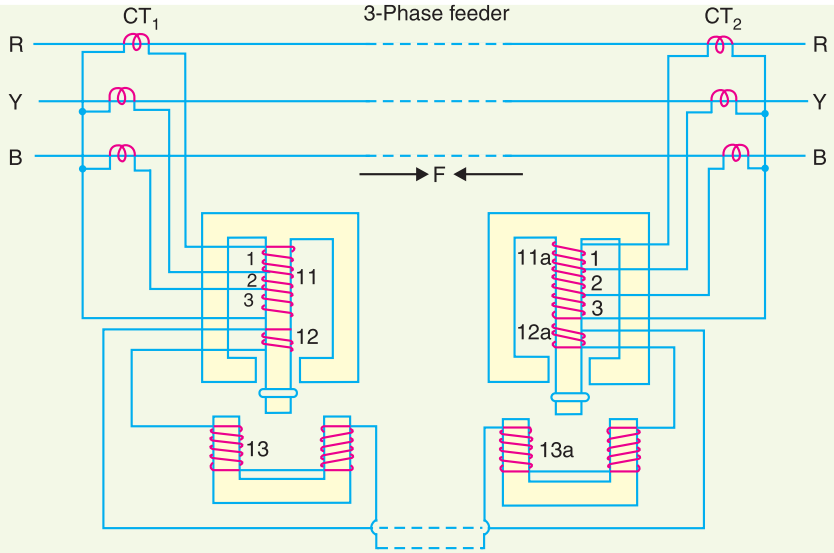

Fig. 23.11

Operation. When the feeder is sound, the currents at its two ends are equal so that the secondary currents in both sets of *CT*s are equal. Consequently, the currents flowing in the relay primary winding 11 and 11 *a* will be equal and they will induce equal voltages in the secondary windings 12 and 12*a*. Since these windings are connected in opposition, no current flows in them or in the operating windings 13 and 13*a*. In the event of a fault on the protected line, the line current at one end must carry a greater current than that at the other end. The result is that voltages induced in the secondary windings 12 and 12 *a* will be different and the current will flow through the operating coils 13, 13*a* and the pilot circuit. Under these conditions, both upper and lower elements of each relay are energised and a forward torque acts on the each relay disc. The operation of the relays will open the circuit breakers at both ends of the line.

(i) Suppose a fault *F* occurs between phases *R* and *Y* and is fed from both sides as shown in Fig. 23.11. This will energise only section 1 of primary windings 11 and 11*a* and induce voltages in the secondary windings 12 and 12*a*. As these voltages are now additive*, therefore, current will circulate through operating coils 13, 13*a* and the pilot circuit. This will cause the relay contacts to close and open the circuit breakers at both ends. A fault between phases *Y* and *B* energises section 2 of primary windings 11 and 11*a* whereas that between *R* and *B* will energise the sections 1 and 2.

(ii) Now imagine that an earth fault occurs on phase *R*. This will energise sections 1, 2 and 3 of the primary windings 11 and 11*a*. Again if fault is fed from both ends, the voltages induced in the secondary windings 12 and 12*a* are additive and cause a current to flow through the operating coils 13, 13*a*. The relays, therefore, operate to open the circuit breakers at both ends of the line. In the event of earth fault on phase *Y*, sections 2 and 3 of primary winding 11 and 11*a* will be energised and cause the relays to operate. An earth fault on phase B will energise only section 3 of relay primary windings 11 and 11*a*.

Advantages

(i) The system is economical as only two pilot wires are required for the protection of a 3-phase line.

(ii) Current transformers of normal design can be used.

(iii) The pilot wire capacitance currents do not affect the operation of relays.

* Because the fault is being fed from both sides.

23.5 Distance Protection

Both time-graded and pilot-wire system are not suitable for the protection of very long high voltage transmission lines. The former gives an unduly long time delay in fault clearance at the generating station end when there are more than four or five sections and the pilot-wire system becomes too expensive owing to the greater length of pilot wires required. This has led to the development of distance protection in which the action of relay depends upon the distance (or impedance) between the point where the relay is installed and the point of fault. This system provides discrimination protection without employing pilot wires.

The principle and operation of distance relays have already been discussed in chapter 21. We shall now consider its application for the protection of transmission lines. Fig. 23.12 (*i*) shows a simple system consisting of lines in series such that power can flow only from left to right. The relays at *A*, *B* and *C* are set to operate for impedance less than Z_1, Z_2 and Z_3 respectively. Suppose a fault occurs between sub-stations *B* and *C*, the fault impedance at power station and sub-station *A* and *B* will be $Z_1 + Z$ and *Z* respectively. It is clear that for the portion shown, only relay at *B* will operate. Similarly, if a fault occurs within section *AB*, then only relay at *A* will operate. In this manner, instantaneous protection can be obtained for all conditions of operation.

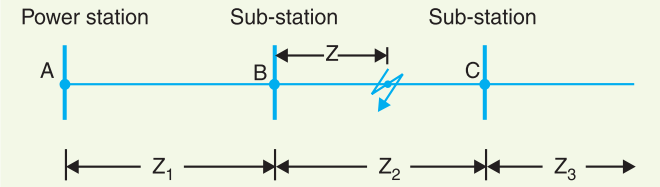

Fig. 23.12 (*i*)

In actual practice, it is not possible to obtain instantaneous protection for complete length of the line due to inaccuracies in the relay elements and instrument transformers. Thus the relay at *A* [See Fig. 23.12 (*i*)] would not be very reliable in distinguishing between a fault at 99% of the distance *AB* and the one at 101% of distance *AB*. This difficulty is overcome by using *'three-zone'* distance protection shown in Fig. 23.12 (*ii*).

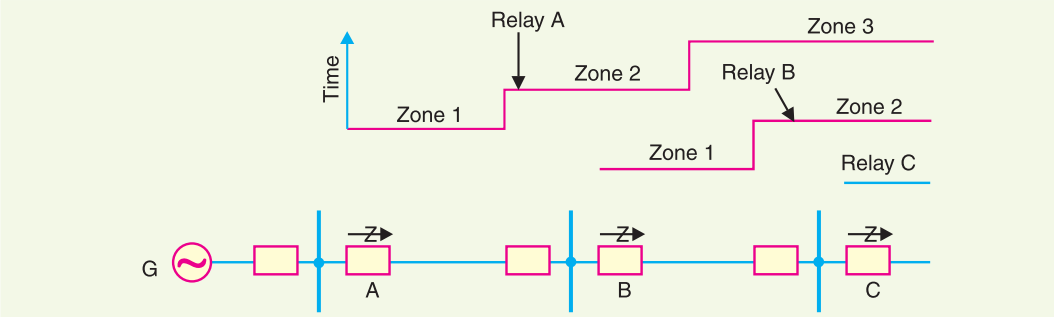

Fig. 23.12 (*ii*)

In this scheme of protection, three distance elements are used at each terminal. The zone 1 element covers first 90% of the line and is arranged to trip instantaneously for faults in this portion. The zone 2 element trips for faults in the remaining 10% of the line and for faults in the next line section, but a time delay is introduced to prevent the line from being tripped if the fault is in the next section. The zone 3 element provides back-up protection in the event a fault in the next section is not cleared by its breaker.

SELF - TEST

1. Fill in the blanks by inserting appropriate words/figures :

(*i*) Differential protection scheme for longer lines is ..... costly.

(*ii*) The bus-bar zone, for the purpose of protection, includes ..... , ... and .....

(*iii*) The two most commonly used schemes for bus-bar protection are ....., and .....

(*iv*) The probability of faults occurring on the lines is much more due to their ..... and .....

(*v*) In time-graded overcurrent protection, ... discrimination is incorporated.

2. Pick-up the correct words/figures from the brackets and fill in the blanks :

(*i*) The parallel feeders ..... be protected by non-directional overcurrent relays alone. (*can, cannot*)

(*ii*) The Translay scheme is essentially a ..... balance system. (*current, voltage*)

(*iii*) A summation transformer is a device that reproduces the polyphase line currents as a ..... phase quantity. (*single, two*)

(*iv*) The ideal scheme of protection for lines is ..... protection. (*differential, distance*)

(*v*) Accurate matching of current transformers is ..... in Merz-Price voltage balance system. (*essential, not essential*)

ANSWERS TO SELF-TEST

1. (*i*) very (*ii*) bus-bars, isolating switches, circuit breakers (*iii*) differential protection, fault bus protection (*iv*) greater length, exposure to atmospheric conditions (*v*) time

2. (*i*) cannot (*ii*) voltage (*iii*) single (*iv*) differential (*v*) essential

CHAPTER REVIEW TOPICS

1. What is the importance of bus-bar protection ?

2. Describe the following systems of bus-bar protection :

(*i*) Differential protection

(*ii*) Fault-bus protection

3. What are the requirements of protection of lines ?

4. Discuss the time-graded overcurrent protection for

(*i*) Radial feeders

(*ii*) Parallel feeders

(*iii*) Ring main system

5. Describe the differential pilot wire method of protection of feeders.

6. Explain the Translay protection scheme for feeders.

7. Describe distance protection scheme for the protection of feeders.

8. Write short-notes on the following :

(*i*) Fault-bus protection

(*ii*) Merz-Price voltage balance system for protection of feeders

(*iii*) Translay scheme

DISCUSSION QUESTIONS

1. What methods can be used to prevent saturation of current transformers ?

2. What factors govern choosing pilot-wire installation ?

3. Why must directional relays be used on a ring main system ?

4. How do time-delay overcurrent relays work on a radial system ?

5. Do overhead systems need differential protection schemes than underground systems ?

6. How are pilot-wire relays built for transmission-line protection ?

GO To FIRST