CONTENTS

CHAPTER

19

Circuit Breakers

19.1 Circuit Breakers
19.2 Arc Phenomenon
19.3 Principles of Arc Extinction
19.4 Methods of Arc Extinction
19.5 Important Terms
19.6 Classification of Circuit Breakers
19.7 Oil Circuit Breakers
19.8 Types of Oil Circuit Breakers
19.9 Plain Break Oil Circuit Breakers
19.10 Arc Control Oil Circuit Breakers
19.11 Low Oil Circuit Breakers
19.12 Maintenance of Oil Circuit Breakers
19.13 Air-Blast Circuit Breakers
19.14 Types of Air- Blast Circuit Breakers
19.15 Sulphur Hexaflouride (SF_6) Circuit Breakers
19.16 Vacuum Circuit Breakers (VCB)
19.17 Switchgear Components
19.18 Problems of Circuit Interruption
19.19 Resistance Switching
19.20 Circuit Breaker Ratings

Introduction

During the operation of power system, it is often desirable and necessary to switch on or off the various circuits (*e.g.*, transmission lines, distributors, generating plants etc.) under both normal and abnormal conditions. In earlier days, this function used to be performed by a switch and a fuse placed in series with the circuit. However, such a means of control presents two disadvantages. Firstly, when a fuse blows out, it takes quite sometime to replace it and restore supply to the customers. Secondly, a fuse cannot successfully interrupt heavy fault currents that result from faults on modern high-voltage and large capacity circuits. Due to these disadvantages, the use of switches and fuses is limited to low-voltage and small capacity circuits where frequent operations are not expected *e.g.*, for switching and protection of distribution transformers, lighting circuits, branch circuits of distribution lines etc.

With the advancement of power system, the lines and other equipment operate at very high voltages and carry large currents. The arrangement of switches along with fuses cannot serve

CONTENTS

the desired function of swithgear in such high capacity circuits. This necessitates to employ a more dependable means of control such as is obtained by the use of *circuit breakers*. A circuit breaker can make or break a circuit either manually or automatically under all conditions *viz.*, no-load, full-load and short-circuit conditions. This characteristic of the circuit breaker has made it a very useful equipment for switching and protection of various parts of the power system. In this chapter, we shall deal with the various types of circuit breakers and their increasing applications as control devices.

19.1 Circuit Breakers

A circuit breaker is a piece of equipment which can

(*i*) make or break a circuit either manually or by remote control under normal conditions

(*ii*) break a circuit *automatically* under fault conditions

(*iii*) make a circuit either manually or by remote control under fault conditions

Thus a circuit breaker incorporates manual (or remote control) as well as automatic control for switching functions. The latter control employs relays and operates only under fault conditions. The mechanism of opening of the circuit breaker under fault conditions has already been briefed in chapter 16.

Operating principle. A circuit breaker essentially consists of fixed and moving contacts, called electrodes. Under normal operating conditions, these contacts remain closed and will not open automatically until and unless the system becomes faulty. Of course, the contacts can be opened manually or by remote control whenever desired. When a fault occurs on any part of the system, the trip coils of the circuit breaker get energised and the moving contacts are pulled apart by some mechanism, thus opening the circuit.

When the contacts of a circuit breaker are separated under fault conditions, an arc is struck between them. The current is thus able to continue until the discharge ceases. The production of arc not only delays the current interruption process but it also generates enormous heat which may cause damage to the system or to the circuit breaker itself. Therefore, the main problem in a circuit breaker is to extinguish the arc within the shortest possible time so that heat generated by it may not reach a dangerous value.

19.2 Arc Phenomenon

When a short-circuit occurs, a heavy current flows through the contacts of the *circuit breaker before they are opened by the protective system. At the instant when the contacts begin to separate, the contact area decreases rapidly and large fault current causes increased current density and hence rise in temperature. The heat produced in the medium between contacts (usually the medium is oil or air) is sufficient to ionise the air or vapourise and ionise the oil. The ionised air or vapour acts as conductor and an arc is struck between the contacts. The p.d. between the contacts is quite small and is just sufficient to maintain the arc. The arc provides a low resistance path and consequently the current in the circuit remains uninterrupted so long as the arc persists.

During the arcing period, the current flowing between the contacts depends upon the arc resistance. The greater the arc resistance, the smaller the current that flows between the contacts. The arc resistance depends upon the following factors :

(*i*) *Degree of ionisation*— the arc resistance increases with the decrease in the number of ionised particles between the contacts.

(*ii*) *Length of the arc*— the arc resistance increases with the length of the arc *i.e.*, separation of contacts.

* **Important note.** In single phase circuits (*e.g.*, lighting circuits etc.), a switch is located in only one of the two conductors to lamps. However, in power circuits, a circuit interrupting device (*e.g.*, a circuit breaker) is put in each *phase* or conductor. These are sometimes called three-pole circuit breakers. In the discussion that follows, we shall confine ourselves to a single-pole device, it is being understood that three such units will be provided in three-phase installation.

(*iii*) *Cross-section of arc*— the arc resistance increases with the decrease in area of X-section of the arc.

19.3 Principles of Arc Extinction

Before discussing the methods of arc extinction, it is necessary to examine the factors responsible for the maintenance of arc between the contacts. These are :

(*i*) p.d. between the contacts

(*ii*) ionised particles between contacts

Taking these in turn,

(*i*) When the contacts have a small separation, the p.d. between them is sufficient to maintain the arc. One way to extinguish the arc is to separate the contacts to such a distance that p.d. becomes inadequate to maintain the arc. However, this method is impracticable in high voltage system where a separation of many metres may be required.

(*ii*) The ionised particles between the contacts tend to maintain the arc. If the arc path is deionised, the arc extinction will be facilitated. This may be achieved by cooling the arc or by bodily removing the ionised particles from the space between the contacts.

19.4 Methods of Arc Extinction

There are two methods of extinguishing the arc in circuit breakers *viz*.

1. High resistance method. 2. Low resistance or current zero method

1. **High resistance method.** In this method, arc resistance is made to increase with time so that current is reduced to a value insufficient to maintain the arc. Consequently, the current is interrupted or the arc is extinguished. The principal disadvantage of this method is that enormous energy is dissipated in the arc. Therefore, it is employed only in d.c. circuit breakers and low-capacity a.c. circuit breakers.

The resistance of the arc may be increased by :

(*i*) *Lengthening the arc.* The resistance of the arc is directly proportional to its length. The length of the arc can be increased by increasing the gap between contacts.

(*ii*) *Cooling the arc.* Cooling helps in the deionisation of the medium between the contacts. This increases the arc resistance. Efficient cooling may be obtained by a gas blast directed along the arc.

(*iii*) *Reducing X-section of the arc.* If the area of X-section of the arc is reduced, the voltage necessary to maintain the arc is increased. In other words, the resistance of the arc path is increased. The cross-section of the arc can be reduced by letting the arc pass through a narrow opening or by having smaller area of contacts.

(*iv*) *Splitting the arc.* The resistance of the arc can be increased by splitting the arc into a number of smaller arcs in series. Each one of these arcs experiences the effect of lengthening and cooling. The arc may be split by introducing some conducting plates between the contacts.

2. **Low resistance or Current zero method.** This method is employed for arc extinction in a.c. circuits only. In this method, arc resistance is kept low until current is zero where the arc extinguishes naturally and is prevented from restriking inspite of the rising voltage across the contacts. All modern high power a.c. circuit breakers employ this method for arc extinction.

In an a.c. system, current drops to zero after every half-cycle. At every current zero, the arc extinguishes for a brief moment. Now the medium between the contacts contains ions and electrons so that it has small dielectric strength and can be easily broken down by the rising contact voltage known as *restriking voltage.* If such a breakdown does occur, the arc will persist for another half-cycle. If immediately after current zero, the dielectric strength of the medium between contacts is built up more rapidly than the voltage across the contacts, the arc fails to restrike and the current will

be interrupted. The rapid increase of dielectric strength of the medium near current zero can be achieved by :

(*a*) causing the ionised particles in the space between contacts to recombine into neutral molecules.

(*b*) sweeping the ionised particles away and replacing them by un-ionised particles

Therefore, the real problem in a.c. arc interruption is to rapidly deionise the medium between contacts as soon as the current becomes zero so that the rising contact voltage or restriking voltage cannot breakdown the space between contacts. The de-ionisation of the medium can be achieved by:

(*i*) *lengthening of the gap.* The dielectric strength of the medium is proportional to the length of the gap between contacts. Therefore, by opening the contacts rapidly, higher dielectric strength of the medium can be achieved.

(*ii*) *high pressure.* If the pressure in the vicinity of the arc is increased, the density of the particles constituting the discharge also increases. The increased density of particles causes higher rate of de-ionisation and consequently the dielectric strength of the medium between contacts is increased.

(*iii*) *cooling.* Natural combination of ionised particles takes place more rapidly if they are allowed to cool. Therefore, dielectric strength of the medium between the contacts can be increased by cooling the arc.

(*iv*) *blast effect.* If the ionised particles between the contacts are swept away and replaced by un-ionised particles, the dielectric strength of the medium can be increased considerably. This may be achieved by a gas blast directed along the discharge or by forcing oil into the contact space.

19.5 Important Terms

The following are the important terms much used in the circuit breaker analysis :

(*i*) **Arc Voltage.** *It is the voltage that appears across the contacts of the circuit breaker during the arcing period.*

As soon as the contacts of the circuit breaker separate, an arc is formed. The voltage that appears across the contacts during arcing period is called the arc voltage. Its value is low except for the *period the fault current is at or near zero current point. At current zero, the arc voltage rises rapidly to peak value and this peak voltage tends to maintain the current flow in the form of arc.

(*ii*) **Restriking voltage.** *It is the transient voltage that appears across the contacts at or near current zero during arcing period.*

At current zero, a high-frequency transient voltage appears across the contacts and is caused by the rapid distribution of energy between the magnetic and electric fields associated with the plant and transmission lines of the system. This transient voltage is known as restriking voltage (Fig. 19.1). The current interruption in the circuit depends upon this voltage. If the restriking voltage rises more rapidly than the dielectric strength of the medium between the contacts, the arc will persist for another half-cycle. On the other hand, if the dielectric strength of the medium builds up more rapidly than the restriking voltage, the arc fails to restrike and the current will be interrupted.

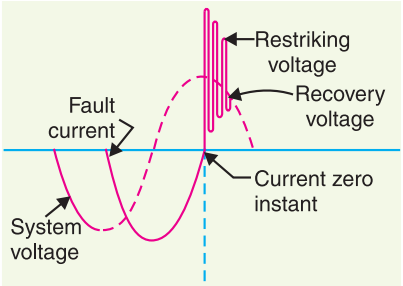

Fig. 19.1

(*iii*) **Recovery voltage.** *It is the normal frequency (50 Hz) r.m.s. voltage that appears across the contacts of the circuit breaker after final arc extinction. It is approximately equal to the system voltage.*

* The power system contains an appreciable amount of inductance. At the instant of current zero point, the fault currrent lags behind the arc voltage by 90º. Obviously, the arc voltge must have a peak value at this instant.

When contacts of circuit breaker are opened, current drops to zero after every half cycle. At some current zero, the contacts are separated sufficiently apart and dielectric strength of the medium between the contacts attains a high value due to the removal of ionised particles. At such an instant, the medium between the contacts is strong enough to prevent the breakdown by the restriking voltage. Consequently, the final arc extinction takes place and circuit current is interrupted. Immediately after final current interruption, the voltage that appears across the contacts has a transient part (See Fig. 19.1). However, these transient oscillations subside rapidly due to the damping effect of system resistance and normal circuit voltage appears across the contacts. The voltage across the contacts is of normal frequency and is known as recovery voltage.

19.6 Classification of Circuit Breakers

There are several ways of classifying the circuit breakers. However, the most general way of classification is on the basis of medium used for arc extinction. The medium used for arc extinction is usually oil, air, sulphur hexafluoride (SF_6) or vacuum. Accordingly, circuit breakers may be classified into :

(*i*) *Oil circuit breakers* which employ some insulating oil (*e.g.*, transformer oil) for arc extinction.

(*ii*) *Air-blast circuit breakers* in which high pressure air-blast is used for extinguishing the arc.

(*iii*) *Sulphur hexafluroide circuit breakers* in which sulphur hexafluoride (SF_6) gas is used for arc extinction.

(*iv*) *Vacuum circuit breakers* in which vacuum is used for arc extinction.

Each type of circuit breaker has its own advantages and disadvantages. In the following sections, we shall discuss the construction and working of these circuit breakers with special emphasis on the way the arc extinction is facilitated.

19.7 Oil Circuit Breakers

In such circuit breakers, some insulating oil (*e.g.*, transformer oil) is used as an arc quenching medium. The contacts are opened under oil and an arc is struck between them. The heat of the arc evaporates the surrounding oil and dissociates it into a substantial volume of gaseous *hydrogen at high pressure. The hydrogen gas occupies a volume about one thousand times that of the oil decomposed. The oil is, therefore, pushed away from the arc and an expanding hydrogen gas bubble surrounds the arc region and adjacent portions of the contacts (See Fig. 19.2). The arc extinction is facilitated mainly by two processes. Firstly, the hydrogen gas has high heat conductivity and cools the arc, thus aiding the de-ionisation of the medium between the contacts. Secondly, the gas sets up turbulence in the oil and forces it into the space between contacts, thus eliminating the arcing products from the arc path. The result is that arc is extinguished and circuit current †interrupted.

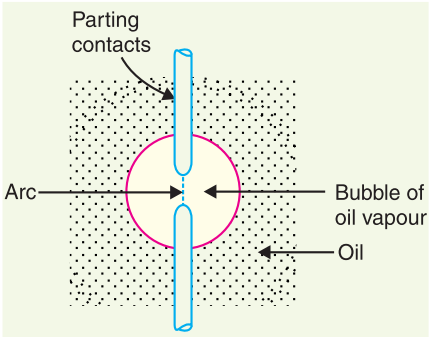

Fig. 19.2

Advantages. The advantages of oil as an arc quenching medium are :

(*i*) It absorbs the arc energy to decompose the oil into gases which have excellent cooling properties.

* Mainly hydrogen gas is produced as a result of oil decomposition. However, a small percentage of methane, ethylene and acetylene is also generated.

† **Important.** The reader may note that arc itself is employed for its extinction. Therefore, it should not be regarded as an unfortunate manifestation. It must also be realised that in the absence of the arc, the current flowing in the circuit would be interrupted instantaneously, and due to the rapid collapse of associated magnetic field, very high voltages would be induced which would severely stress the insulation on the system. On the other hand, the arc permits the circuit interruption to take place at some current zero and thus without inducing potentials of dangerous values.

(*ii*) It acts as an insulator and permits smaller clearance between live conductors and earthed components.

(*iii*) The surrounding oil presents cooling surface in close proximity to the arc.

Disadvantages. The disadvantages of oil as an arc quenching medium are :

(*i*) It is inflammable and there is a risk of a fire.

(*ii*) It may form an explosive mixture with air

(*iii*) The arcing products (*e.g.*, carbon) remain in the oil and its quality deteriorates with successive operations. This necessitates periodic checking and replacement of oil.

19.8 Types of Oil Circuit Breakers

The oil circuit breakers find extensive use in the power system. These can be classified into the following types :

(*i*) *Bulk oil circuit breakers* which use a large quantity of oil. The oil has to serve two purposes. Firstly, it extinguishes the arc during opening of contacts and secondly, it insulates the current conducting parts from one another and from the earthed tank. Such circuit breakers may be classified into :

(*a*) Plain break oil circuit breakers (*b*) Arc control oil circuit breakers.

In the former type, no special means is available for controlling the arc and the contacts are directly exposed to the whole of the oil in the tank. However, in the latter type, special arc control devices are employed to get the beneficial action of the arc as efficiently as possible.

(*ii*) *Low oil circuit breakers* which use minimum amount of oil. In such circuit breakers, oil is used *only* for arc extinction; the current conducting parts are insulated by air or porcelain or organic insulating material.

19.9 Plain Break Oil Circuit Breakers

A plain-break oil circuit breaker involves the simple process of separating the contacts under the whole of the oil in the tank. There is no special system for arc control other than the increase in length caused by the separation of contacts. The arc extinction occurs when a certain critical gap between the contacts is reached.

The plain-break oil circuit breaker is the earliest type from which all other circuit breakers have developed. It has a very simple construction. It consists of fixed and moving contacts enclosed in a strong weather-tight earthed tank containing oil upto a certain level and an air cushion above the oil level. The air cushion provides sufficient room to allow for the reception of the arc gases without the generation of unsafe pressure in the dome of the circuit breaker. It also absorbs the mechanical shock of the upward oil movement. Fig. 19.3 shows a *double break plain oil circuit breaker. It is called a double break because it provides two breaks in series.

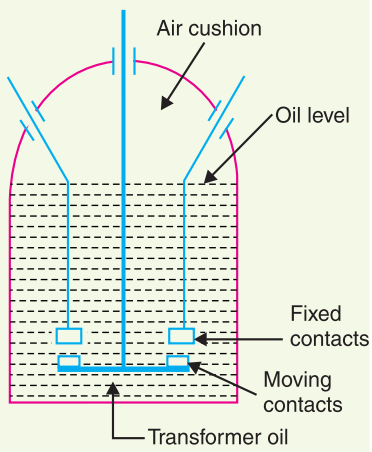

Fig. 19.3

Under normal operating conditions, the fixed and moving contacts remain closed and the breaker carries the normal circuit current. When a fault occurs, the moving contacts are pulled down by the protective system and an arc is struck which vapourises the oil mainly into hydrogen gas. The arc extinction is facilitated by the following processes :

* This type of construction increases the effective speed of arc lengthening and permits to divide the transient re-striking voltage over two breaks so that only half appears across each.

(*i*) The hydrogen gas bubble generated around the arc cools the arc column and aids the de-ionisation of the medium between the contacts.

(*ii*) The gas sets up turbulence in the oil and helps in eliminating the arcing products from the arc path.

(*iii*) As the arc lengthens due to the separating contacts, the dielectric strength of the medium is increased.

The result of these actions is that at some critical gap length, the arc is extinguished and the circuit current is interrupted.

Disadvantages

(*i*) There is no special control over the arc other than the increase in length by separating the moving contacts. Therefore, for successful interruption, long arc length is necessary.

(*ii*) These breakers have long and inconsistent arcing times.

(*iii*) These breakers do not permit high speed interruption.

Due to these disadvantages, plain-break oil circuit breakers are used only for low-voltage applications where high breaking-capacities are not important. It is a usual practice to use such breakers for low capacity installations for voltages not exceeding †11 kV.

19.10 Arc Control Oil Circuit Breakers

In case of plain-break oil circuit breaker discussed above, there is very little artificial control over the arc. Therefore, comparatively long arc length is essential in order that turbulence in the oil caused by the gas may assist in quenching it. However, it is necessary and desirable that final arc extinction should occur while the contact gap is still short. For this purpose, some arc control is incorporated and the breakers are then called arc control circuit breakers. There are two types of such breakers, namely :

(*i*) *Self-blast oil circuit breakers*— in which arc control is provided by internal means *i.e.* the arc itself is employed for its own extinction efficiently.

(*ii*) *Forced-blast oil circuit breakers*— in which arc control is provided by mechanical means external to the circuit breaker.

(*i*) **Self-blast oil circuit breakers.** In this type of circuit breaker, the gases produced during arcing are confined to a small volume by the use of an insulating rigid pressure chamber or pot surrounding the contacts. Since the space available for the arc gases is restricted by the chamber, a very high pressure is developed to force the oil and gas through or around the arc to extinguish it. The magnitude of pressure developed depends upon the value of fault current to be interrupted. As the pressure is generated by the arc itself, therefore, such breakers are sometimes called self-generated pressure oil circuit breakers.

The pressure chamber is relatively cheap to make and gives reduced final arc extinction gap length and arcing time as against the plain-break oil circuit breaker. Several designs of pressure chambers (sometimes called explosion pots) have been developed and a few of them are described below :

(*a*) **Plain explosion pot.** It is a rigid cylinder of insulating material and encloses the fixed and moving contacts (See Fig. 19.4). The moving contact is a cylindrical rod passing through a restricted opening (called throat) at the bottom. When a fault occurs, the contacts get separated and an arc is struck between them. The heat of the arc decomposes oil into a gas at very high pressure in the pot. This high pressure forces the oil and

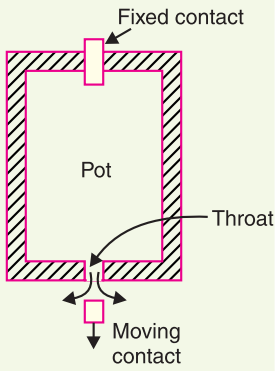

Fig. 19.4

† At relatively high voltages, the size of such a breaker assumes unduly large proportions due to the necessity of very long gap between the contacts for successful arc extinction.

gas through and round the arc to extinguish it. If the final arc extinction does not take place while the moving contact is still within the pot, it occurs immediately after the moving contact leaves the pot. It is because emergence of the moving contact from the pot is followed by a violent rush of gas and oil through the throat producing rapid extinction.

The principal limitation of this type of pot is that it cannot be used for very low or for very high fault currents. With low fault currents, the pressure developed is small, thereby increasing the arcing time. On the other hand, with high fault currents, the gas is produced so rapidly that explosion pot is liable to burst due to high pressure. For this reason, plain explosion pot operates well on moderate short-circuit currents only where the rate of gas evolution is moderate.

(*b*) Cross jet explosion pot. This type of pot is just a modification of plain explosion pot and is illustrated in Fig. 19.5. It is made of insulating material and has channels on one side which act as arc splitters. The arc splitters help in increasing the arc length, thus facilitating arc extinction. When a fault occurs, the moving contact of the circuit breaker begins to separate. As the moving contact is withdrawn, the arc is initially struck in the top of the pot. The gas generated by the arc exerts pressure on the oil in the back passage. When the moving contact uncovers the arc splitter ducts, fresh oil is forced **across* the arc path. The arc is, therefore, driven sideways into the "arc splitters" which increase the arc length, causing arc extinction.

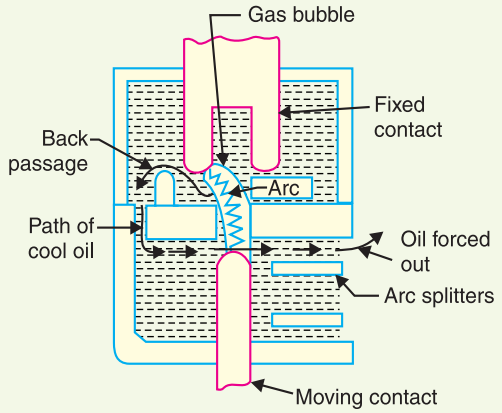

Fig. 19.5

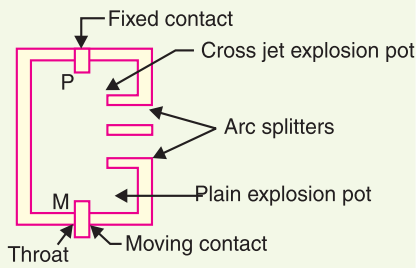

Fig. 19.6

The cross-jet explosion pot is quite efficient for interrupting heavy fault currents. However, for low fault currents, the gas pressure is †small and consequently the pot does not give a satisfactory operation.

(*c*) Self-compensated explosion pot. This type of pot is essentially a combination of plain explosion pot and cross jet explosion pot. Therefore, it can interrupt low as well as heavy short circuit currents with reasonable accuracy.

Fig. 19.6 shows the schematic diagram of self-compensated explosion pot. It consists of two chambers, the upper chamber is the cross-jet explosion pot with two arc splitter ducts while the lower one is the plain explosion pot. When the short-circuit current is heavy, the rate of generation of gas is very high and the device behaves as a cross-jet explosion pot. The arc extinction takes place when the moving contact uncovers the first or second arc splitter duct. However, on low short-circuit currents, the rate of gas generation is small and the tip of the moving contact has the time to reach the lower chamber. During this time, the gas builds up sufficient pressure as there is very little leakage through

* Since the jet of oil is forced at right angles to the arc path, this type of pot is referred to as cross-jet explosion pot.

† The rate at which oil moves into the path of arc is a function of gas pressure. The gas pressure depends upon the value of fault current. Lower the fault current, lesser the gas pressure generated and vice-versa.

arc splitter ducts due to the obstruction offered by the arc path and right angle bends. When the moving contact comes out of the throat, the arc is extinguished by plain pot action.

It may be noted that as the severity of the short-circuit current increases, the device operates less and less as a plain explosion pot and more and more as a cross-jet explosion pot. Thus the tendency is to make the control self-compensating over the full range of fault currents to be interrupted.

***(ii)* Forced-blast oil circuit breakers.** In the self-blast oil circuit breakers discussed above, the arc itself generates the necessary pressure to force the oil across the arc path. The major limitation of such breakers is that arcing times tend to be long and inconsistent when operating against currents considerably less than the rated currents. It is becasue the gas generated is much reduced at low values of fault currents. This difficulty is overcome in forced-blast oil circuit breakers in which the necessary pressure is generated by external mechanical means independent of the fault currents to be broken.

In a forced -blast oil circuit breaker, oil pressure is created by the piston-cylinder arrangement. The movement of the piston is mechanically coupled to the moving contact. When a fault occurs, the contacts get separated by the protective system and an arc is struck between the contacts. The piston forces a jet of oil towards the contact gap to extinguish the arc. It may be noted that necessary oil pressure produced does not in any way depend upon the fault current to be broken.

Advantages

(*a*) Since oil pressure developed is independent of the fault current to be interrupted, the performance at low currents is more consistent than with self-blast oil circuit breakers.

(*b*) The quantity of oil required is reduced considerably.

19.11 Low Oil Circuit Breakers

In the bulk oil circuit breakers discussed so far, the oil has to perform two functions. Firstly, it acts as an arc quenching medium and secondly, it insulates the live parts from earth. It has been found that only a small percentage of oil is actually used for arc extinction while the major part is utilised for insulation purposes. For this reason, the quantity of oil in bulk oil circuit breakers reaches a very high figure as the system voltage increases. This not only increases the expenses, tank size and weight of the breaker but it also increases the fire risk and maintenance problems.

The fact that only a small percentage of oil (about 10% of total) in the bulk oil circuit breaker is actually used for arc extinction leads to the question as to why the remainder of the oil, that is not immediately surrounding the device, should not be omitted with consequent saving in bulk, weight and fire risk. This led to the development of low-oil circuit breaker. A low oil circuit breaker employs solid materials for insulation purposes and uses a small quantity of oil which is just sufficient for arc extinction. As regards quenching the arc, the oil behaves identically in bulk as well as low oil circuit breaker. By using suitable arc control devices, the arc extinction can be further facilitated in a low oil circuit breaker.

Construction. Fig 19.7 shows the cross section of a single phase low oil circuit breaker. There are two compartments separated from each other but both filled with oil. The upper chamber is the circuit breaking chamber while the lower one is the supporting chamber. The two chambers are separated by a partition and oil from one chamber is prevented from mixing with the other chamber. This arrangement permits two advantages. Firstly, the circuit breaking chamber requires a small volume of oil which is just enough for arc extinction. Secondly, the amount of oil to be replaced is reduced as the oil in the supporting chamber does not get contaminated by the arc.

(*i*) *Supporting chamber.* It is a porcelain chamber mounted on a metal chamber. It is filled with oil which is physically separated from the oil in the circuit breaking compartment. The oil inside the supporting chamber and the annular space formed between the porcelain insulation and bakelised paper is employed for insulation purposes only.

(*ii*) *Circuit-breaking chamber.* It is a porcelain enclosure mounted on the top of the supporting compartment. It is filled with oil and has the following parts :

(*a*) upper and lower fixed contacts

(*b*) moving contact

(*c*) turbulator

The moving contact is hollow and includes a cylinder which moves down over a fixed piston. The turbulator is an arc control device and has both axial and radial vents. The axial venting ensures the interruption of low currents whereas radial venting helps in the interruption of heavy currents.

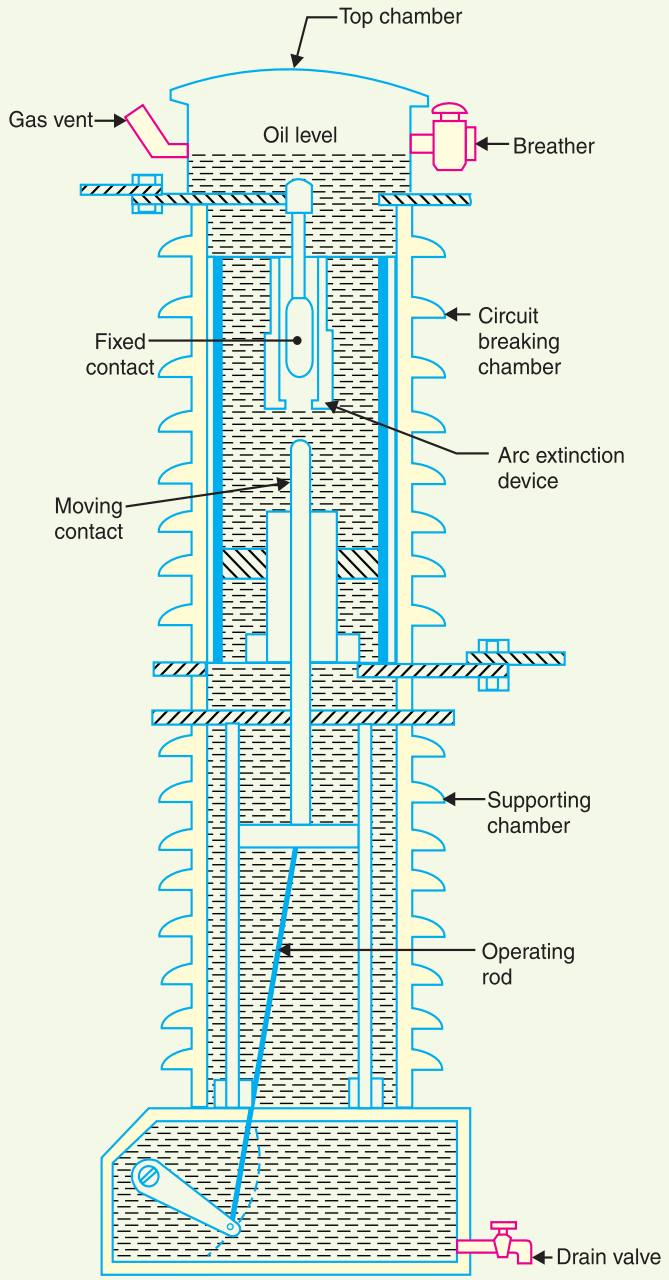

Fig. 19.7 Low-oil Circuit Breaker

(*iii*) *Top chamber.* It is a metal chamber and is mouted on the circuit-breaking chamber. It provides expansion space for the oil in the circuit breaking compartment. The top chamber is also provided with a separator which prevents any loss of oil by centrifugal action caused by circuit breaker operation during fault conditions.

Operation. Under normal operating conditions, the moving contact remains engaged with the upper fixed contact. When a fault occurs, the moving contact is pulled down by the tripping springs and an arc is struck. The arc energy vaporises the oil and produces gases under high pressure. This action constrains the oil to pass through a central hole in the moving contact and results in forcing series of oil through the respective passages of the turbulator. The process of turbulation is orderly one, in which the sections of the arc are successively quenched by the effect of separate streams of oil moving across each section in turn and bearing away its gases.

Advantages. A low oil circuit breaker has the following advantages over a bulk oil circuit breaker:

(*i*) It requires lesser quantity of oil.

(*ii*) It requires smaller space.

(*iii*) There is reduced risk of fire.

(*iv*) Maintenance problems are reduced.

Disadvantages. A low oil circuit breaker has the following disadvantages as compared to a bulk oil circuit breaker :

(*i*) Due to smaller quantity of oil, the degree of carbonisation is increased.

(*ii*) There is a difficulty of removing the gases from the contact space in time.

(*iii*) The dielectric strength of the oil deteriorates rapidly due to high degree of carbonisation.

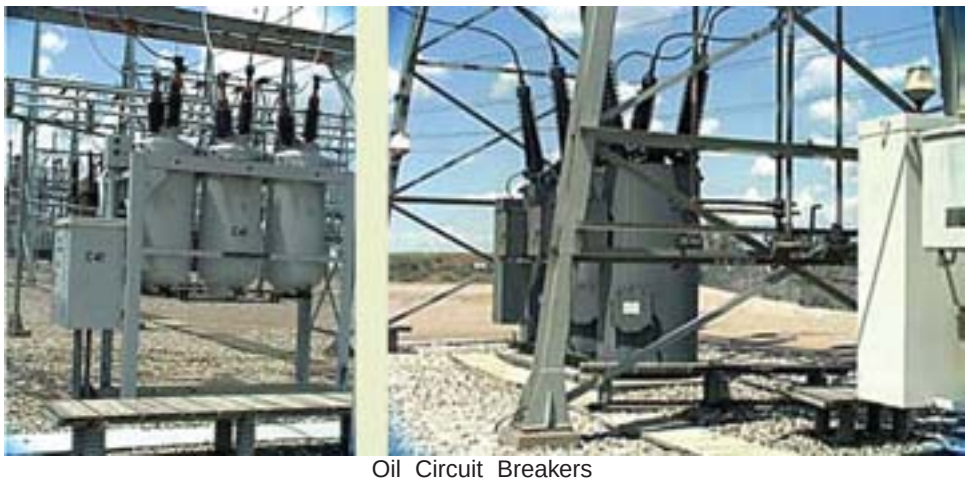

Oil Circuit Breakers

19.12 Maintenance of Oil Circuit Breakers

The maintenance of oil circuit breaker is generally concerned with the checking of contacts and dielectric strength of oil. After a circuit breaker has interrupted fault currents a few times or load currents several times, its contacts may get burnt by arcing and the oil may lose some of its dielectric strength due to carbonisation. This results in the reduced rupturing capacity of the breaker. Therefore, it is a good practice to inspect the circuit breaker at regular intervals of 3 or 6 months. During inspection of the breaker, the following points should be kept in view :

(*i*) Check the current carrying parts and arcing contacts. If the burning is severe, the contacts should be replaced.

(*ii*) Check the dielectric strength of the oil. If the oil is badly discoloured, it should be changed or reconditioned. The oil in good condition should withstand 30 kV for one minute in a standard oil testing cup with 4 mm gap between electrodes.

(*iii*) Check the insulation for possible damage. Clean the surface and remove carbon deposits with a strong and dry fabric.
(*iv*) Check the oil level.
(*v*) Check closing and tripping mechanism.

19.13 Air-Blast Circuit Breakers

These breakers employ a high pressure *air-blast as an arc quenching medium. The contacts are opened in a flow of air-blast established by the opening of blast valve. The air-blast cools the arc and sweeps away the arcing products to the atomsphere. This rapidly increases the dielectric strength of the medium between contacts and prevents from re-establishing the arc. Consequently, the arc is extinguished and flow of current is interrupted.

Advantages. An air-blast circuit breaker has the following advantages over an oil circuit breaker:

(*i*) The risk of fire is eliminated.
(*ii*) The arcing products are completely removed by the blast whereas the oil deteriorates with successive operations; the expense of regular oil replacement is avoided.
(*iii*) The growth of dielectric strength is so rapid that final contact gap needed for arc extinction is very small. This reduces the size of the device.
(*iv*) The arcing time is very small due to the rapid build up of dielectric strength between contacts. Therefore, the arc energy is only a fraction of that in oil circuit breakers, thus resulting in less burning of contacts.
(*v*) Due to lesser arc energy, air-blast circuit breakers are very suitable for conditions where frequent operation is required.
(*vi*) The energy supplied for arc extinction is obtained from high pressure air and is independent of the current to be interrupted.

Disadvantages. The use of air as the arc quenching medium offers the following disadvantges :

(*i*) The air has relatively inferior arc extinguishing properties.
(*ii*) The air-blast circuit breakers are very sensitive to the variations in the rate of rise of restriking voltage.
(*iii*) Considerable maintenance is required for the compressor plant which supplies the air-blast.

The air blast circuit breakers are finding wide applications in high voltage installations. Majority of the circuit breakers for voltages beyond 110 kV are of this type.

19.14 Types of Air-Blast Circuit Breakers

Depending upon the direction of air-blast in relation to the arc, air-blast circuit breakers are classified into :

(*i*) *Axial-blast type* in which the air-blast is directed along the arc path as shown in Fig. 19.8(*i*).

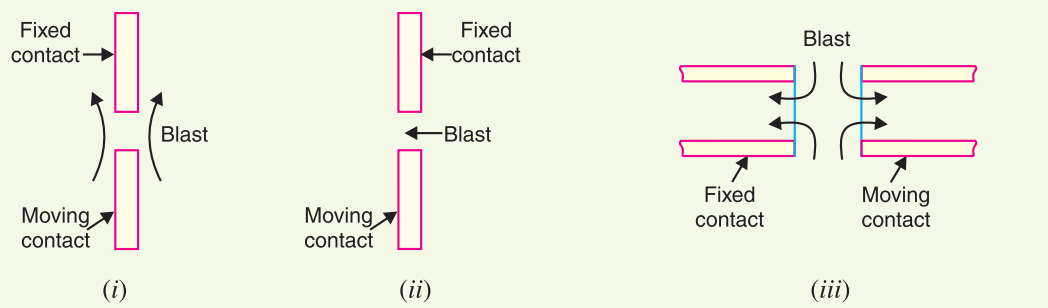

Fig. 19.8

* Other gases such as nitrogen, carbon dioxide and hyrdogen can also be used. The circuit breaking properties of nitrogen are about similar to air and there is no added advantage of using it. Carbon dioxide tends to freeze and hydrogen gas is very costly. Therefore, air is used as the circuit breaking medium.

(*ii*) *Cross-blast type* in which the air-blast is directed at right angles to the arc path as shown in Fig. 19.8 (*ii*).

(*iii*) *Radial-blast type* in which the air-blast is directed radially as shown in Fig. 19.8 (*iii*).

(*i*) Axial-blast air circuit breaker. Fig 19.9 shows the essential components of a typical axial-blast air circuit breaker. The fixed and moving contacts are held in the closed position by spring pressure under normal conditions. The air reservoir is connected to the arcing chamber through an air valve. This valve remains closed under normal conditions but opens automatically by the tripping impulse when a fault occurs on the system.

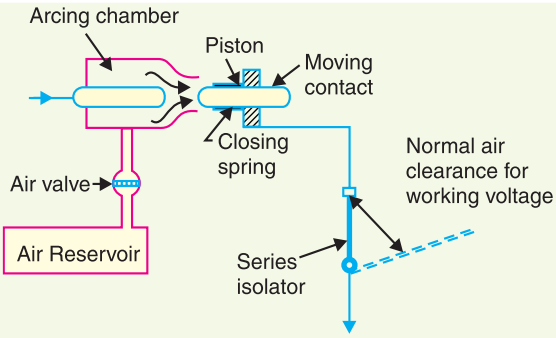

Fig. 19.9

When a fault occurs, the tripping impulse causes opening of the air valve which connects the circuit breaker reservoir to the arcing chamber. The high pressure air entering the arcing chamber pushes away the moving contact against spring pressure. The moving contact is separated and an arc is struck. At the same time, high pressure air blast flows along the arc and takes away the ionised gases along with it. Consequently, the arc is extinguished and current flow is interrupted.

It may be noted that in such circuit breakers, the contact separation required for interruption is generally small (1·75 cm or so). Such a small gap may constitute inadequate clearance for the normal service voltage. Therefore, an isolating switch is incorporated as a part of this type of circuit breaker. This switch opens immediately after fault interruption to provide the necessary clearance for insulation.

(*ii*) Cross-blast air breaker. In this type of circuit breaker, an air-blast is directed at right angles to the arc. The cross-blast lengthens and forces the arc into a suitable chute for arc extinction. Fig. 19.10 shows the essential parts of a typical cross-blast air circuit breaker. When the moving contact is withdrawn, an arc is struck between the fixed and moving contacts. The high pressure cross-blast forces the arc into a chute consisting of arc splitters and baffles. The splitters serve to increase the length of the arc and baffles give improved cooling. The result is that arc is extinguished and flow of current is interrupted. Since blast pressure is same for all currents, the inefficiency at low currents is eliminated. The final gap for interruption is great enough to give normal insulation clearance so that a series isolating switch is not necessary.

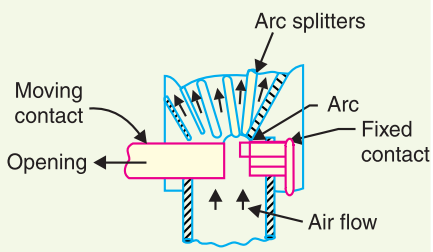

Fig. 19.10

19.15 Sulphur Hexaflouride (SF_6) Circuit Breakers

In such circuit breakers, sulphur hexaflouride (SF_6) gas is used as the arc quenching medium. The SF_6 is an electro-negative gas and has a strong tendency to absorb free electrons. The contacts of the breaker are opened in a high pressure flow of SF_6 gas and an arc is struck between them. The conducting free electrons in the arc are rapidly captured by the gas to form relatively immobile negative ions. This loss of conducting electrons in the arc quickly builds up enough insulation strength

to extinguish the arc. The SF_6 circuit breakers have been found to be very effective for high power and high voltage service.

Construction. Fig. 19.11 shows the parts of a typical SF_6 circuit breaker. It consists of fixed and moving contacts enclosed in a chamber (called arc interruption chamber) containing SF_6 gas. This chamber is connected to SF_6 gas reservior. When the contacts of breaker are opened, the valve mechanism permits a high pressure SF_6 gas from the reservoir to flow towards the arc interruption chamber. The fixed contact is a hollow cylindrical current carrying contact fitted with an arc horn. The moving contact is also a hollow cylinder with rectangular holes in the sides to permit the SF_6 gas to let out through these holes after flowing along and across the arc. The tips of fixed contact, moving contact and arcing horn are coated with copper-tungsten arc resistant material. Since SF_6 gas is costly, it is reconditioned and reclaimed by suitable auxiliary sytem after each operation of the breaker.

Working. In the closed position of the breaker, the contacts remain surrounded by SF_6 gas at a pressure of about 2·8 kg/cm^2. When the breaker operates, the moving contact is pulled apart and an arc is struck between the contacts. The movement of the moving contact is synchronised with the opening of a valve which permits SF_6 gas at 14 kg/cm^2 pressure from the reservoir to the arc interruption chamber. The high pressure flow of SF_6 rapidly absorbs the free electrons in the arc path to form immobile negative ions which are ineffective as charge carriers. The result is that the medium between the contacts quickly builds up high dielectric strength and causes the extinction of the arc. After the breaker operation (*i.e.*, after arc extinction), the valve is closed by the action of a set of springs.

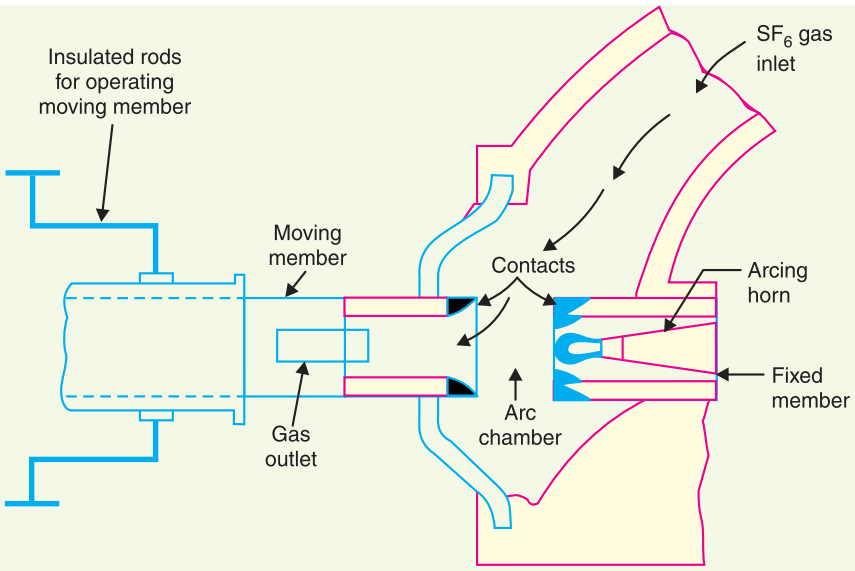

Fig. 19.11

Advantages. Due to the superior arc quenching properties of SF_6 gas, the SF_6 circuit breakers have many advantages over oil or air circuit breakers. Some of them are listed below :

(i) Due to the superior arc quenching property of SF_6, such circuit breakers have very short arcing time.

(ii) Since the dielectric strength of SF_6 gas is 2 to 3 times that of air, such breakers can interrupt much larger currents.

(iii) The SF_6 circuit breaker gives noiselss operation due to its closed gas circuit and no exhaust to atmosphere unlike the air blast circuit breaker.

(*iv*) The closed gas enclosure keeps the interior dry so that there is no moisture problem.

(*v*) There is no risk of fire in such breakers because SF_6 gas is non-inflammable.

(*vi*) There are no carbon deposits so that tracking and insulation problems are eliminated.

(*vii*) The SF_6 breakers have low maintenance cost, light foundation requirements and minimum auxiliary equipment.

(*viii*) Since SF_6 breakers are totally enclosed and sealed from atmosphere, they are particularly suitable where explosion hazard exists *e.g.*, coal mines.

Disadvantages

(*i*) SF_6 breakers are costly due to the high cost of SF_6.

(*ii*) Since SF_6 gas has to be reconditioned after every operation of the breaker, additional equipment is requried for this purpose.

Applications. A typical SF_6 circuit breaker consists of interrupter units each capable of dealing with currents upto 60 kA and voltages in the range of 50—80 kV. A number of units are connected in series according to the system voltage. SF_6 circuit breakers have been developed for voltages 115 kV to 230 kV, power ratings 10 MVA to 20 MVA and interrupting time less than 3 cycles.

19.16 Vacuum Circuit Breakers (VCB)

In such breakers, vacuum (degree of vacuum being in the range from 10^{-7} to 10^{-5} torr) is used as the arc quenching medium. Since vacuum offers the highest insulating strength, it has far superior arc quenching properties than any other medium. For example, when contacts of a breaker are opened in vacuum, the interruption occurs at first current zero with dielectric strength between the contacts building up at a rate thousands of times higher than that obtained with other circuit breakers.

Principle. The production of arc in a vacuum circuit breaker and its extinction can be explained as follows : When the contacts of the breaker are opened in vacuum (10^{-7} to 10^{-5} torr), an arc is produced between the contacts by the ionisation of metal vapours of contacts*. However, the arc is quickly extinguished because the metallic vapours, electrons and ions produced during arc rapidly condense on the surfaces of the circuit breaker contacts, resulting in quick recovery of dielectric strength. The reader may note the salient feature of vacuum as an arc quenching medium. As soon as the arc is produced in vacuum, it is quickly extinguished due to the fast rate of recovery of dielectric strength in vacuum.

Construction. Fig. 19.12 shows the parts of a typical vacuum circuit breaker. It consists of fixed contact, moving contact and arc shield mounted inside a vacuum chamber. The movable member is connected to the control mechanism by stainless steel bellows. This enables the permanent sealing of the vacuum chamber so as to eliminate the possibility of leak. A glass vessel or ceramic vessel is used as the outer insulating body. The arc shield prevents the deterioration of the internal dielectric strength by preventing metallic vapours falling on the inside surface of the outer insulating cover.

Working. When the breaker operates, the moving contact separates from the fixed contact and an arc is struck between the contacts. The production of arc is due to the ionisation of metal ions and depends very much upon the material of contacts. The arc is quickly extinguished because the metallic vapours, electrons and ions produced during arc are diffused in a short time and seized by the surfaces of moving and fixed members and shields. Since vacuum has very fast rate of recovery of dielectric strength, the arc extinction in a vacuum breaker occurs with a short contact separation (say 0·625 cm).

* This can be explained by *Field emission theory.* The microscopic sharp projections on the surface of contacts of the circuit breaker act as points of high intensity field, resulting in the emission of electrons. Since the sectional area of each projection is very small, the current density becomes very large and the heat produced causes melting of projections.

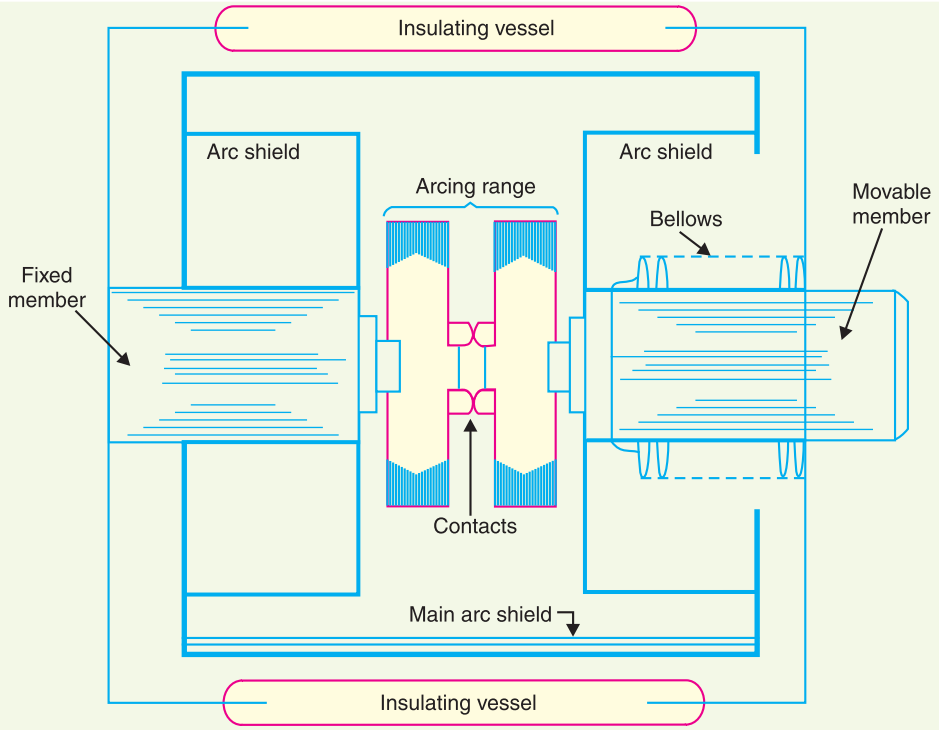

Fig. 19.12

Advantages. Vacuum circuit breakers have the following advantages :

(*i*) They are compact, reliable and have longer life.

(*ii*) There are no fire hazards.

(*iii*) There is no generation of gas during and after operation.

(*iv*) They can interrupt any fault current. The outstanding feature of a VCB is that it can break any heavy fault current perfectly just before the contacts reach the definite open position.

(*v*) They require little maintenance and are quiet in operation.

(*vi*) They can successfully withstand lightning surges.

(*vii*) They have low arc energy.

(*viii*) They have low inertia and hence require smaller power for control mechanism.

Applications. For a country like India, where distances are quite large and accessibility to remote areas difficult, the installation of such outdoor, maintenance free circuit breakers should prove a definite advantage. Vacuum circuit breakers are being employed for outdoor applications ranging from 22 kV to 66 kV. Even with limited rating of say 60 to 100 MVA, they are suitable for a majority of applications in rural areas.

19.17 Switchgear Components

The following are some important components common to most of the circuit breakers :

(*i*) Bushings (*ii*) Circuit breaker contacts

(*iii*) Instrument transformers (*iv*) Bus-bars and conductors

(*i*) **Bushings.** When a high voltage conductor passes through a metal sheet or frame which is at earth potential, the necessary insulation is provided in the form of bushing. The primary function of

the bushing is to prevent electrical breakdown between the enclosed conductor and the surrounding earthed metal work. Fig. 19.13 (*i*) shows the use of bushing for a plain-break oil circuit breaker. The high voltage conductor passes through the bushing made of some insulating material (*e.g.*, porcelain, steatite). Although there are several types of bushing (*e.g.*, condenser type, oil filled etc.), they perfom the same function of insulating the conductor from earthed tank.

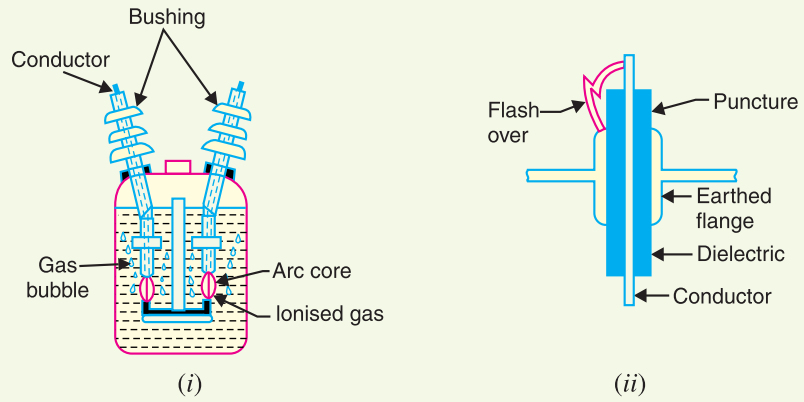

Fig. 19.13

The failure of the bushing can occur in two ways. Firstly, the breakdown may be caused by *puncture i.e.*, dielectric failure of the insulating material of the bushing. Secondly, the breakdown may occur in the form of a *flash-over* between the exposed conductor at either end of the bushing and the earthed metal. Fig. 19.13 (*ii*) illustrates these two possibilities. The bushings are so designed that flash-over takes place before they get punctured. It is because the puncture generally renders the bushing insulation unserviceable and incapable of withstanding the normal voltage. On the other hand, a flash-over may result in comparatively harmless burning of the surface of the bushing which can then continue to give adequate service pending replacement.

(*ii*) Circuit breaker contacts. The circuit breaker contacts are required to carry normal as well as short-circuit current. In carrying the normal current, it is desirable that the temperature should not rise above the specified limits and that there should be low voltage drop at the point of contact. In carrying breaking and making short-circuit currents, the chief effects to be dealt with are melting and vapourisation by the heat of the arc and those due to electromagnetic forces. Therefore, the design of contacts is of considerable importance for satisfactory operation of the circuit breakers. There are three types of circuit breaker contacts *viz*.

(*a*) *Tulip type contacts.* Fig. 19.14 (*i*) shows the Tulip type contact. It consists of moving contact which moves inside the fixed contacts. At contact separation, the arc is generally established between the tips of the fixed contacts and the tip of the moving contact as shown in Fig. 19.14 (*ii*). The advantage of this type of contact is that arcing is confined to the regions which are not in contact in the fully engaged position.

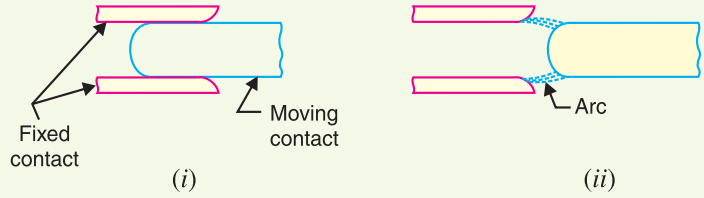

Fig. 19.14

(*b*) *Finger and wedge contacts.* Fig. 19.15 (*i*) shows the finger and wedge type contact. This type of contact is largely used for low-voltage oil circuit breakers owing to the general unsuitability for use with arc control devices.

(*c*) *Butt contacts.* Fig. 19.15 (*ii*) shows the butt type contact and is formed by the springs and the moving contact. It possesses two advantages. Firstly, spring pressure is available to assist contact separation. This is useful in single-break oil circuit breakers and air-blast circuit breakers where relatively small "loop" forces are available to assist in opening. Secondly, there is no grip force so that this type of contact is especially suitable for higher short-circuit rating.

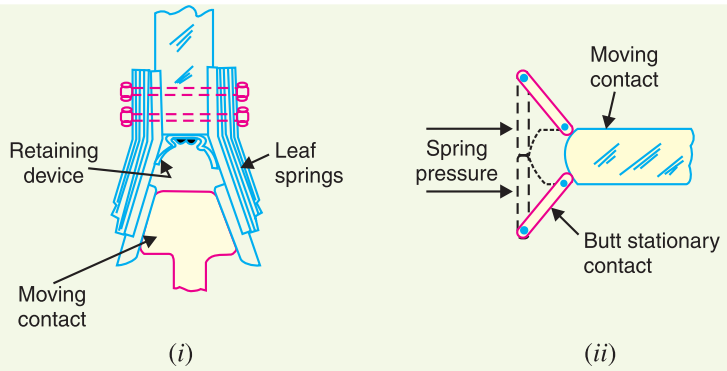

Fig. 19.15

(*iii*) Instrument transformers. In a modern power system, the circuits operate at very high voltages and carry current of thousands of amperes. The measuring instruments and protective devices cannot work satisfactorily if mounted directly on the power lines. This difficulty is overcome by installing instrument transformers on the power lines. The function of these instrument transformers is to transform voltages or currents in the power lines to values which are convenient for the operation of measuring instruments and relays. There are two types of instrument transformers *viz*.

(*a*) Current transformer (C.T.)

(*b*) Potential transformer (P.T.)

The primary of current transformer is connected in the power line. The secondary winding provides for the instruments and relays a current which is a constant fraction of the current in the line.

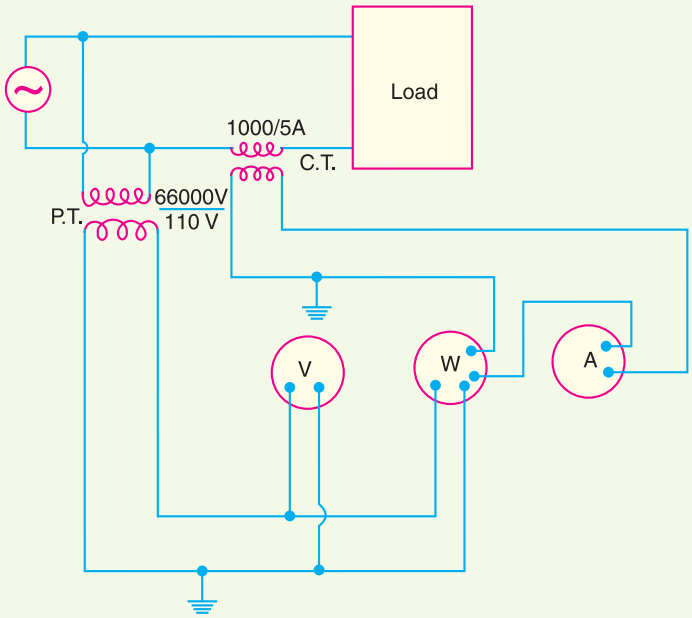

Fig. 19.16

Similarly, a potential transformer is connected with its primary in the power line. The secondary provides for the instruments and relays a voltage which is a known fraction of the line voltage.

Fig. 19.16 shows the use of instrument transformers. The *potential transformer rated 66,000/110V provides a voltage supply for the potential coils of voltmeter and wattmeter. The current transformer rated 1000/5 A supplies current to the current coils of wattmeter and ammeter. The use of instrument transformers permits the following advantages :

(*a*) They isolate the measuring instruments and relays from high-voltage power circuits.

(*b*) The leads in the secondary circuits carry relatively small voltages and currents. This permits to use wires of smaller size with minimum insulation.

(*iv*) Bus-bars and conductors. The current carrying members in a circuit breaker consist of fixed and moving contacts and the conductors connecting these to the points external to the breaker. If the switchgear is of outdoor type, these connections are connected directly to the overhead lines. In case of indoor switchgear, the incoming conductors to the circuit breaker are connected to the bus-bars.

19.18 Problems of Circuit Interruption

The power system contains an appreciable amount of inductance and some capacitance. When a fault occurs, the energy stored in the system can be considerable. Interruption of fault current by a circuit breaker will result in most of the stored energy dissipated within the circuit breaker, the remainder being dissipated during oscillatory surges in the system. The oscillatory surges are undesirable and, therefore, the circuit breaker must be designed to dissipate as much of the stored energy as possible.

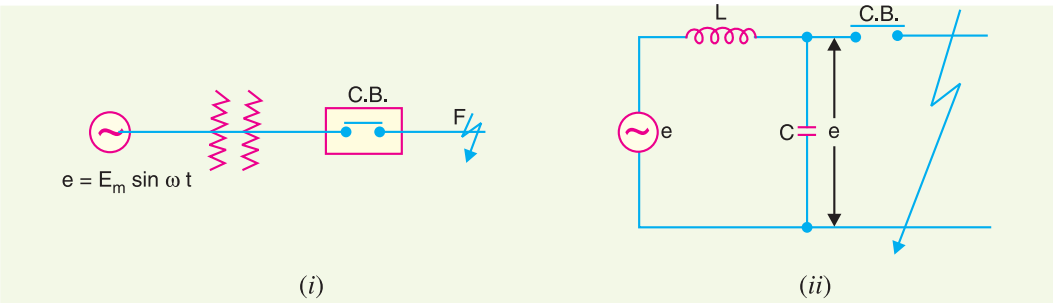

Fig. 19.17

Fig. 19.17 (*i*) shows a short-circuit occuring on the transmission line. Fig 19.17 (*ii*) shows its equivalent circuit where *L* is the inductance per phase of the **system upto the point of fault and *C* is the capacitance per phase of the system. The resistance of the system is neglected as it is generally small.

(*i*) Rate of rise of re-striking voltage. It is the rate of increase of re-striking voltage and is abbreviated by R.R.R.V. Usually, the voltage is in kV and time in microseconds so that R.R.R.V. is in kV/μ sec.

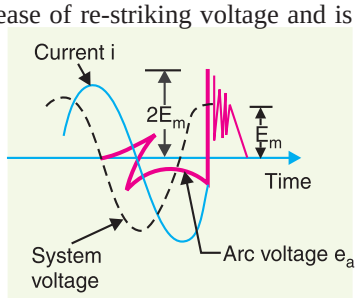

Fig. 19.18

Consider the opening of a circuit breaker under fault conditions shown in simplified form in Fig. 19.17 (*ii*) above. Before current interruption, the capacitance *C* is short-circuited by the fault and the short-circuit current through the breaker is limited by inductance *L* of the system only. Consequently, the short-circuit current will lag the voltage by 90° as shown in Fig. 19.18, where *i* represents the short-circuit current and e_a represents the arc volt-

* Note that one side of each secondary circuit is grounded. This is done to prevent it from becoming charged at high potential should a breakdown of potential transformer (or current transformer) insulation occur.

** Generator, transformer and transmission line in this case.

age. It may be seen that in this condition, the *entire generator voltage appears across inductance L.

When the contacts are opened and the arc finally extinguishes at some current zero, the generator voltage e is suddenly applied to the inductance and capacitance in series. This L–C combination forms an oscillatory circuit and produces a transient of frequency :

$$f_n = \frac{1}{2\pi\sqrt{LC}}$$

which appears across the capacitor C and hence across the contacts of the circuit breaker. This transient voltage, as already noted, is known as re-striking voltage and may reach an instantaneous peak value twice the peak phase-neutral voltage *i.e.* $2E_m$. The system losses cause the oscillations to decay fairly rapidly but the initial overshoot increases the possibility of re-striking the arc.

It is the rate of rise of re-striking voltage (R.R.R.V.) which decides whether the arc will re-strike or not. If R.R.R.V. is greater than the rate of rise of dielectric strength between the contacts, the arc will re-strike. However, the arc will fail to re-strike if R.R.R.V. is less than the rate of increase of dielectric strength between the contacts of the breaker. The value of R.R.R.V. depends upon :

(*a*) recovery voltage

(*b*) natural frequency of oscillations

For a short-circuit occuring near the power station bus-bars, C being small, the natural frequency f_n $(=1/2\pi\sqrt{LC})$ will be high. Consequently, R.R.R.V. will attain a large value. Thus the worst condition for a circuit breaker would be that when the fault takes place near the bus-bars.

(*ii*) Current chopping. *It is the phenomenon of current interruption before the natural current zero is reached.*

Current chopping **mainly occurs in air-blast circuit breakers because they retain the same extinguishing power irrespective of the magnitude of the current to be interrupted. When breaking low currents (*e.g.*, transformer magnetising current) with such breakers, the powerful de-ionising effect of air-blast causes the current to fall abruptly to zero well before the natural current zero is reached. This phenomenon is known as current chopping and results in the production of high voltage transient across the contacts of the circuit breaker as discussed below :

Consider again Fig. 19.17 (*ii*) repeated as Fig. 19.19 (*i*). Suppose the arc current is i when it is chopped down to zero value as shown by point a in Fig. 19.19 (*ii*). As the chop occurs at current i, therefore, the energy stored in inductance is $L\,i^2/2$. This energy will be transferred to the capacitance C, charging the latter to a prospective voltage e given by :

$$\frac{1}{2}L\,i^2 = \frac{C\,e^2}{2}$$

or

$$e = i\sqrt{\frac{L}{C}} \text{ volts} \qquad ...(i)$$

The prospectve voltage e is very *** high as compared to the dielectric strength gained by the gap so that the breaker restrikes. As the de-ionising force is still in action, therefore, chop occurs again but the arc current this time is smaller than the previous case. This induces a lower prospective

* Because capacitance is short-circuited by the fault.

** Current chopping is not common in oil circuit breakers because in most of them, arc control is proportional to the fault current to be interrupted. In other words, the exinguishing power in such breakers is proportional to the current to be interrupted.

*** For example, if L and C are 4mH and 0·001 μF respectively, a current chop of magnitude 50 A would induce a voltage of

$$e = i\sqrt{\frac{L}{C}} = 50\sqrt{\frac{4\times10^{-3}}{0\cdot001\times10^{-6}}} = 100\times10^3 \text{ volts} = 100 \text{ kV}$$

voltage to re-ignite the arc. In fact, several chops may occur until a low enough current is interrupted which produces insufficient induced voltage to re-strike across the breaker gap. Consequently, the final interruption of current takes place.

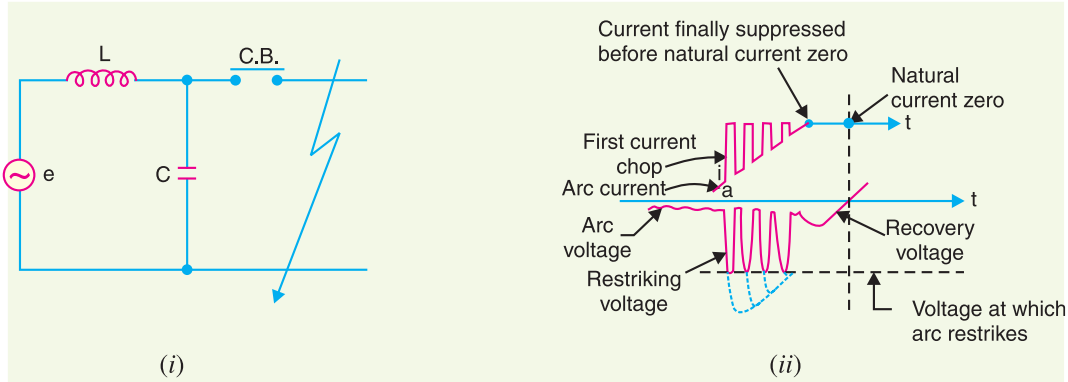

Fig. 19.19

Excessive voltage surges due to current chopping are prevented by shunting the contacts of the breaker with a resistor (*resistance switching*) such that reignition is unlikely to occur. This is explained in Art 19.19.

***(iii)* Capacitive current breaking.** Another cause of excessive voltage surges in the circuit breakers is the interruption of capacitive currents. Examples of such instances are opening of an unloaded long transmission line, disconnecting a capacitor bank used for power factor improvement etc. Consider the simple equivalent circuit of an unloaded transmission line shown in Fig. 19.20. Such a line, although unloaded in the normal sense, will actually carry a capacitive current I on account of appreciable amount of capacitance C between the line and the earth.

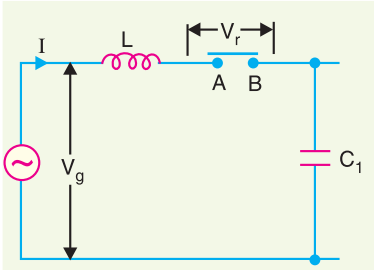

Fig. 19.20

Let us suppose that the line is opened by the circuit breaker at the instant when line capacitive current is zero [point 1 in Fig. 19.21]. At this instant, the generator voltage V_g will be maximum (*i.e.*, V_{gm}) lagging behind the current by 90°. The opening of the line leaves a standing charge on it (*i.e.*, end B of the line) and the capacitor C_1 is charged to V_{gm}. However, the generator end of the line (*i.e.*, end A of the line) continues its normal sinusoidal variations. The voltage V_r across the circuit breaker will be the difference between the voltages on the respective sides. Its initial value is zero (point 1) and increases slowly in the beginning. But half a cycle later [point R in Fig. 19.21], the potential of the circuit breaker contact 'A' becomes maximum negative which causes the voltage across the breaker (V_r) to become 2 V_{gm}. This voltage may be sufficient to re-strike the arc. The two previously separated parts of the circuit will now be joined by an arc of very low resistance. The line capacitance discharges at once to reduce the voltage across the circuit breaker, thus setting up high frequency transient. The peak value of the initial transient will be twice the voltage at that instant *i.e.*, – 4 V_{gm}. This will cause the transmission voltage to swing to – 4 V_{gm} to + V_{gm} *i.e.*, –3V_{gm}.

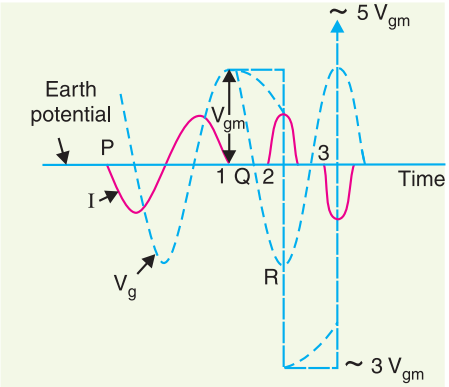

Fig. 19.21

The re-strike arc current quickly reaches its first zero as it varies at natural frequency. The voltage on the line is now $-3V_{gm}$ and once again the two halves of the circuit are separated and the line is isolated at this potential. After about half a cycle further, the aforesaid events are repeated even on more formidable scale and the line may be left with a potential of $5V_{gm}$ above earth potential. Theoretically, this phenomenon may proceed infinitely increasing the voltage by successive increment of 2 times V_{gm}.

While the above description relates to the worst possible conditions, it is obvious that if the gap breakdown strength does not increase rapidly enough, successive re-strikes can build up a dangerous voltage in the open circuit line. However, due to leakage and corona loss, the maximum voltage on the line in such cases is limited to $5\ V_{gm}$.

19.19 Resistance Switching

It has been discussed above that current chopping, capacitive current breaking etc. give rise to severe voltage oscillations. These excessive voltage surges during circuit interruption can be prevented by the use of shunt resistance R connected across the circuit breaker contacts as shown in the equivalent circuit in Fig. 19.22. This is known as resistance switching.

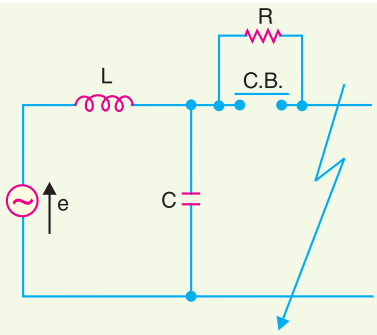

Fig. 19.22

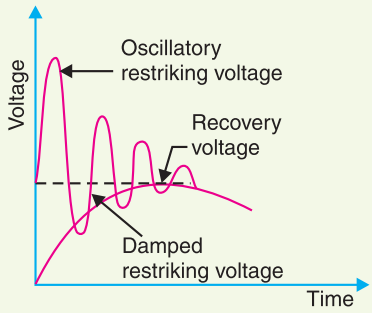

Fig. 19.23

Referring to Fig. 19.22, when a fault occurs, the contacts of the circuit breaker are opened and an arc is struck between the contacts. Since the contacts are shunted by resistance R, a part of arc current flows through this resistance. This results in the decrease of arc current and an increase in the rate of de-ionisation of the arc path. Consequently, the arc resistance is increased. The increased arc resistance leads to a further increase in current through shunt resistance. This process continues until the arc current becomes so small that it fails to maintain the arc. Now, the arc is extinguished and circuit current is interrupted.

The shunt resistor also helps in limiting the oscillatory growth of re-striking voltage. It can be proved mathematically that natural frequency of oscillations of the circuit shown in Fig. 19.22 is given by :

$$f_n = \frac{1}{2\pi}\sqrt{\frac{1}{LC} - \frac{1}{4R^2C^2}}$$

The effect of shunt resistance R is to prevent the oscillatory growth of re-striking voltage and cause it to grow exponentially upto recovery voltage. This is being most effective when the value of R is so chosen that the circuit is critically damped. The value of R required for critical damping is $0{\cdot}5\sqrt{L/C}$. Fig. 19.23 shows the oscillatory growth and exponential growth when the circuit is critically damped.

To sum up, resistors across breaker contacts may be used to perform one or more of the following functions :

(i) To reduce the rate of rise of re-striking voltage and the peak value of re-striking voltage.

(ii) To reduce the voltage surges due to current chopping and capacitive current breaking.

(*iii*) To ensure even sharing of re-striking voltage transient acorss the various breaks in multi-break circuit breakers.

It may be noted that value of resistance required to perform each function is usually different. However, it is often necessary to compromise and make one resistor do more than one of these functions.

19.20 Circuit Breaker Ratings

A circuit breaker may be called upon to operate under all conditions. However, major duties are imposed on the circuit breaker when there is a fault on the system in which it is connected. Under fault conditions, a circuit breaker is required to perform the following three duties :

(*i*) It must be capable of opening the faulty circuit and breaking the fault current.

(*ii*) It must be capable of being closed on to a fault.

(*iii*) It must be capable of carrying fault current for a short time while another circuit breaker (in series) is clearing the fault.

Corresponding to the above mentioned duties, the circuit breakers have three ratings *viz.* **(*i*)** breaking capacity **(*ii*)** making capacity and **(*iii*)** short-time capacity.

(*i*) Breaking capacity. *It is current (r.m.s.) that a circuit breaker is capable of breaking at given recovery voltage and under specified conditions (e.g., power factor, rate of rise of re-striking voltage).*

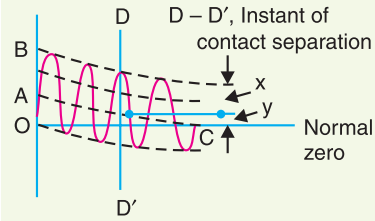

Fig. 19.24

The breaking capacity is always stated at the r.m.s. value of fault current at the instant of contact separation. When a fault occurs, there is considerable asymmetry in the fault current due to the presence of a d.c. component. The d.c. component dies away rapidly, a typical decrement factor being 0·8 per cycle. Referring to Fig. 19.24, the contacts are separated at DD′. At this instant, the fault current has

x = maximum value of a.c. component

y = d.c. component

∴ Symmetrical breaking current = r.m.s. value of a.c. component

$$= \frac{x}{\sqrt{2}}$$

Asymmetrical breaking current = r.m.s. value of total current

$$= \sqrt{\left(\frac{x}{\sqrt{2}}\right)^2 + y^2}$$

It is a common practice to express the breaking capacity in MVA by taking into account the rated breaking current and rated service voltage. Thus, if I is the rated breaking current in amperes and V is the rated service line voltage in volts, then for a 3-phase circuit,

$$\text{Breaking capacity} = \sqrt{3} \times V \times I \times 10^{-6} \text{ MVA}$$

In India (or Britain), it is a usual practice to take breaking current equal to the symmetrical breaking current. However, American practice is to take breaking current equal to asymmetrical breaking current. Thus the American rating given to a circuit breaker is higher than the Indian or British rating.

It seems to be illogical to give breaking capacity in MVA since it is obtained from the product of short-circuit current and rated service voltage. When the short-circuit current is flowing, there is only a small voltage across the breaker contacts, while the service voltage appears across the contacts only

after the current has been interrupted. Thus MVA rating is the product of two quantities which do not exist simultaneously in the circuit.

Therefore, the *agreed international standard of specifying breaking capacity is defined as the rated symmetrical breaking current at a rated voltage.

(*ii*) Making capacity. There is always a possibility of closing or making the circuit under short-circuit conditions. The capacity of a breaker to "make" current depends upon its ability to withstand and close successfully against the effects of electromagnetic forces. These forces are proportional to the square of maximum instantaneous current on closing. Therefore, making capacity is stated in terms of a peak value of current instead of r.m.s. value.

The peak value of current (including d.c. component) during the first cycle of current wave after the closure of circuit breaker is known as **making capacity.**

It may be noted that the definition is concerned with the first cycle of current wave on closing the circuit breaker. This is because the maximum value of fault current possibly occurs in the first cycle only when maximum asymmetry occurs in any phase of the breaker. In other words, the making current is equal to the maximum value of asymmetrical current. To find this value, we must multiply symmetrical breaking current by $\sqrt{2}$ to convert this from r.m.s. to peak, and then by 1·8 to include the "doubling effect" of maximum asymmetry. The total multiplication factor becomes $\sqrt{2} \times 1{\cdot}8 = 2{\cdot}55$.

$\therefore$ Making capacity $= 2{\cdot}55 \times$ Symmetrical breaking capacity

(*iii*) Short-time rating. *It is the period for which the circuit breaker is able to carry fault current while remaining closed.*

Sometimes a fault on the system is of very temporary nature and persists for 1 or 2 seconds after which the fault is automatically cleared. In the interest of continuity of supply, the breaker should not trip in such situations. This means that circuit breakers should be able to carry high current safely for some specified period while remaining closed *i.e.*, they should have proven short-time rating. However, if the fault persists for a duration longer than the specified time limit, the circuit breaker will trip, disconnecting the faulty section.

The short-time rating of a circuit breaker depends upon its ability to withstand **(*a*)** the electromagnetic force effects and **(*b*)** the temperature rise. The oil circuit breakers have a specified limit of 3 seconds when the ratio of symmetrical breaking current to the rated normal current does not exceed 40. However, if this ratio is more than 40, then the specified limit is 1 second.

Normal current rating. It is the r.m.s. value of current which the circuit breaker is capable of carrying continuously at its rated frequency under specified conditions. The only limitation in this case is the temperature rise of current-carrying parts.

Example 19.1. *A circuit breaker is rated as 1500 A, 1000 MVA, 33 kV, 3-second, 3-phase oil circuit breaker. Find (i) rated normal current (ii) breaking capacity (iii) rated symmetrical breaking current (iv) rated making current (v) short-time rating (vi) rated service voltage.*

Solution.

(*i*) Rated normal current = **1500 A**

(*ii*) Breaking capacity = **1000 MVA**

---

* The proponents of MVA rating, however, advance another view which does not seem to be so illogical. Though this MVA rating does not appear at the breaker contacts, it does exist in the windings of the generating plant where both generated voltage and current exist simultaneously. The generated voltage is absorbed in the impedance of the circuit. Since the impedance is distributed, the voltage cannot be measured anywhere while the faulty current is flowing. Therefore, the only way to obtain its value is to measure the recovery voltage immediately after current interruption. This argument seems to have some justification.

(*iii*) Rated symmetrical breaking current = $\dfrac{1000 \times 10^6}{\sqrt{3} \times 33 \times 10^3}$ = **17496 A** (r.m.s.)

(*iv*) Rated making current = 2·55 × 17496 = **44614 A** (peak)

(*v*) Short-time rating = **17496A** for 3 seconds

(*vi*) Rated service voltage = **33 kV** (r.m.s.)

Example 19.2. *A 50 Hz, 11 kV, 3-phase alternator with earthed neutral has a reactance of 5 ohms per phase and is connected to a bus-bar through a circuit breaker. The distributed capacitance upto circuit breaker between phase and neutral in 0·01 μF. Determine*

(*i*) *peak re-striking voltage across the contacts of the breaker*

(*ii*) *frequency of oscillations*

(*iii*) *the average rate of rise of re-striking voltage upto the first peak*

Solution.

Inductance per phase, $L = \dfrac{X_L}{2\pi f} = \dfrac{5}{2\pi \times 50} = 0{\cdot}0159$ H

Capacitance per phase, $C = 0{\cdot}01\,\mu\text{F} = 10^{-8}$ F

(*i*) Maximum value of recovery voltage (phase to neutral)

$$E_{max} = \sqrt{2} \times \frac{11}{\sqrt{3}} = 8{\cdot}98 \text{ kV}$$

∴ Peak re-striking voltage = $2\,E_{max} = 2 \times 8{\cdot}98 =$ **17·96 kV**

(*ii*) Frequency of oscillations is

$$f_n = \frac{1}{2\,\pi\,\sqrt{LC}} = \frac{1}{2\pi\,\sqrt{0{\cdot}0159 \times 10^{-8}}} = \textbf{12,628 Hz}$$

(*iii*) Peak re-striking voltage occurs at a time *t* given by ;

$$t = \frac{1}{2\,f_n} = \pi\,\sqrt{LC} = \pi\,\sqrt{0{\cdot}0159 \times 10^{-8}} = 39{\cdot}6 \times 10^{-6} \text{ sec} = 39{\cdot}6\,\mu \text{ sec}$$

∴ Average rate of rise of re-striking voltage

$$= \frac{\text{Peak re-striking voltage}}{\text{Time upto first peak}} = \frac{17{\cdot}96 \text{ kV}}{39{\cdot}6\,\mu \text{ sec}}$$

$$= 0{\cdot}453 \text{ kV}/\mu \text{ sec} = \mathbf{453 \times 10^3 \text{ kV/sec}}$$

Example 19.3. *In a short circuit test on a circuit breaker, the following readings were obtained on single frequency transient :*

(*i*) *time to reach the peak re-striking voltage, 50 μ sec*

(*ii*) *the peak re-striking voltage, 100 kV*

Determine the average RRRV and frequency of oscillations

Solution.

$$\text{Average RRRV} = \frac{\text{Peak re-striking voltage}}{\text{Time to reach peak value}}$$

$$= \frac{100 \text{ kV}}{50\,\mu \text{ sec}} = 2 \text{ kV}/\mu \text{ Sec} = \mathbf{2 \times 10^6 \text{ kV/sec}}$$

Natural frequency of oscillations,

$$f_n = \frac{1}{2 \times \text{Time to reach peak value}}$$

$$= \frac{1}{2 \times 50\ \mu\text{ sec}}$$

$$= \frac{1}{2 \times 50 \times 10^{-6}} = \mathbf{10{,}000\ Hz}$$

Example 19.4. *An air-blast circuit breaker is designed to interrupt a transformer magnetising current of 11 A (r.m.s.) chops the current at an instantaneous value of 7 A. If the values of L and C in the circuit are 35·2 H and 0·0023 μF, find the value of voltage that appears across the contacts of the breaker. Assume that all the inductive energy is transferred to the capacitance.*

Solution.

Voltage across breaker contacts at chopping is

$$e = i\sqrt{\frac{L}{C}} \qquad \text{(See. Art. 19.18)}$$

Here, $i = 7$ A ; $L = 35{\cdot}2$ H and $C = 0{\cdot}0023\ \mu$F

$$\therefore \qquad e = 7\sqrt{\frac{35 \cdot 2}{0 \cdot 0023 \times 10^{-6}}}\ \text{volts} = 866 \times 10^3\ \text{V} = \mathbf{866\ kV}$$

TUTORIAL PROBLEMS

1. A circuit breaker is rated 2500 A, 1500 MVA, 33 kV, 3 sec, 3-phase oil circuit breaker. Determine (*i*) the rated normal current (*ii*) breaking current (*iii*) making current (*iv*) short time rating current.
   [(*i*) 2500 A (*ii*) 26243 A (*iii*) 66920 A (*iv*) 26243 A for 3 sec]
2. A circuit breaker is rated at 1500 A, 2000 MVA, 33 kV, 3 sec, 3-phase oil circuit breaker. Determine (*i*)the rated normal current (*ii*) breaking current (*iii*) making current (*iv*) short time rating current.
   [(*i*)1500A (*ii*) 34·29 kA (*iii*) 89·22 kA (*iv*) 34·29 kA for 3 sec]

SELF - TEST

1. **Fill in the blanks by inserting appropriate words/figures.**
   - **(*i*)** A circuit breaker opens ..... when a fault occurs on the system.
   - **(*ii*)** A circuit breaker can ..... the circuit immediately after automatic operation.
   - **(*iii*)** When the contacts of a circuit breaker are opened on the occurrence of a fault, an ..... is struck.
   - **(*iv*)** An a.c. circuit is more easily interrupted than a d.c. circuit because alternating current provides ..... .
   - **(*v*)** If the length of the arc increases, its resistance is ..... .
   - **(*vi*)** If dielectric strength of the medium between contacts builds up more rapidly than the re-striking voltage, then arc will be ..... .
   - **(*vii*)** In an oil circuit breaker, ... is used as the arc quenching medium.
   - **(*viii*)** The quantity of oil needed for arc control oil circuit breakers is ..... than that of plain break oil-circuit breaker.
   - **(*ix*)** Current chopping mainly occurs in ..... circuit breakers.
   - **(*x*)** Capacitive current breaking results in .....
2. **Pick up the correct words/figures from the brackets and fill in the blanks.**
   - **(*i*)** Cross jet explosion pot breaker can interrupt ..... short circuit currents efficiently. (*heavy, low*)
   - **(*ii*)** In forced blast oil circuit breakers, the extinguishing force is ..... the fault current to be interrupted. (*dependent upon, independent of*)
   - **(*iii*)** In low oil circuit breakers, ... is used for insulation purposes. (*solid material, oil*)
   - **(*iv*)** Forced-blast circuit breakers have ..... speed of circuit interruption. (*low, high*)

ANSWERS TO SELF-TEST

1. (*i*) automatically (*ii*) remake (*iii*) arc (*iv*) natural current zeros (*v*) increased (*vi*) extinguished (*vii*) some mineral oil (*viii*) less (*ix*) air-blast (*x*) voltage surges
2. (*i*) heavy (*ii*) independent of (*iii*) solid material (*iv*) high

CHAPTER REVIEW TOPICS

1. What is a circuit breaker ? Describe its operating principle.
2. Discuss the arc phenomenon in a circuit breaker.
3. Explain the various methods of arc extinction in a circuit breaker.
4. Define and explain the following terms as applied to circuit breakers :
   (*i*) Arc voltage
   (*ii*) Restriking voltage
   (*iii*) Recovery voltage
5. Describe briefly the action of an oil circuit breaker. How does oil help in arc extinction ?
6. Discuss the advantages and disadvantages of oil circuit breakers.
7. Explain with neat sketches the construction and working of the following circuit breakers :
   (*i*) Plain explosion pot
   (*ii*) Cross jet explosion pot
   (*iii*) Self-compensated explosion pot
8. Explain the difference between bulk oil circuit breakers and low-oil circuit breakers.
9. Discuss the constructional details and operation of a typical low-oil circuit breaker ? What are its relative merits and demerits ?
10. Discuss the principle of operation of an air-blast circuit breaker. What are the advantages and disadvantages of using air as the arc quenching medium ?
11. Explain briefly the following types of air-blast circuit breakers :
    (*i*) Axial-blast type
    (*ii*) Cross-blast type
12. What are the important components common to most of circuit breakers ? Discuss each component briefly.
13. Write a short note on the rate of re-striking voltage indicating its importance in the arc extinction.
14. Discuss the phenomenon of
    (*i*) Current chopping
    (*ii*) Capacitive current breaking
15. Write short notes on the following :
    (*i*) Resistance switching
    (*ii*) Circuit breaker ratings
    (*iii*) Circuit interruption problems

DISCUSSION QUESTIONS

1. Why do plain break oil circuit breakers have a low speed of circuit interruption ?
2. Is it logical to express the breaking capacity of a circuit breaker in MVA ? Discuss.
3. Why is current interruption easier in an a.c. circuit than in a d.c. circuit ?
4. Why are circuit breakers designed to have a short-time rating ?
5. Is arc production in a circuit breaker unfortunate mainfestation ?

GO To FIRST