CONTENTS

CHAPTER

26

Neutral Grounding

26.1 Grounding or Earthing

26.2 Equipment Grounding

26.3 System Grounding

26.4 Ungrounded Neutral System

26.5 Neutral Grounding

26.6 Advantages of Neutral Grounding

26.7 Methods of Neutral Grounding

26.8 Solid Grounding

26.9 Resistance Grounding

26.10 Reactance Grounding

26.11 Arc Suppression Coil Grounding (or Resonant Grounding)

26.12 Voltage Transformer Earthing

26.13 Grounding Transformer

Introduction

In power system, **grounding* or *earthing* means connecting frame of electrical equipment (non-current carrying part) or some electrical part of the system (*e.g.* neutral point in a star-connected system, one conductor of the secondary of a transformer etc.) to earth *i.e.* soil. This connection to earth may be through a conductor or some other circuit element (e.g. a resistor, a circuit breaker etc.) depending upon the situation. Regardless of the method of connection to earth, grounding or earthing offers two principal advantages. First, it provides protection to the power system. For example, if the neutral point of a star-connected system is grounded through a circuit breaker and phase to earth fault occurs on any one line, a large fault current will flow through the circuit breaker. The

* In electrical and electronic circuits, all the points which are electrically the same (called common points) are connected to the metal chassis. This method of grounding is called *chassis ground* or *circuit ground*. Circuit ground may or may not be connected to earth (*i.e.* soil). For example, in most cars, the negative terminal of the battery and one side of all electrical circuits are connected to the metal chassis.

CONTENTS

circuit breaker will open to isolate the faulty line. This protects the power system from the harmful effects of the fault. Secondly, earthing of electrical equipment (*e.g.* domestic appliances, hand-held tools, industrial motors etc.) ensures the safety of the persons handling the equipment. For example, if insulation fails, there will be a direct contact of the live conductor with the metallic part (*i.e.* frame) of the equipment. Any person in contact with the metallic part of this equipment will be subjected to a dangerous electrical shock which can be fatal. In this chapter, we shall discuss the importance of grounding or earthing in the line of power system with special emphasis on neutral grounding.

26.1 Grounding or Earthing

The process of connecting the metallic frame (i.e. non-current carrying part) of electrical equipment or some electrical part of the system (e.g. neutral point in a star-connected system, one conductor of the secondary of a transformer etc.) to earth (i.e. soil) is called **grounding** *or* **earthing.**

It is strange but true that grounding of electrical systems is less understood aspect of power system. Nevertheless, it is a very important subject. If grounding is done systematically in the line of the power system, we can effectively prevent accidents and damage to the equipment of the power system and at the same time continuity of supply can be maintained. Grounding or earthing may be classified as : ***(i)*** Equipment grounding ***(ii)*** System grounding.

Equipment grounding deals with earthing the non-current-carrying metal parts of the electrical equipment. On the other hand, system grounding means earthing some part of the electrical system *e.g.* earthing of neutral point of star-connected system in generating stations and sub-stations.

26.2 Equipment Grounding

The process of connecting non-current-carrying metal parts (i.e. metallic enclosure) of the electrical equipment to earth (i.e. soil) in such a way that in case of insulation failure, the enclosure effectively remains at earth potential is called **equipment grounding.**

We are frequently in touch with electrical equipment of all kinds, ranging from domestic appliances and hand-held tools to industrial motors. We shall illustrate the need of effective equipment grounding by considering a single-phase circuit composed of a 230 V source connected to a motor M as shown in Fig. 26.1. Note that neutral is solidly grounded at the service entrance. In the interest of easy understanding, we shall divide the discussion into three heads *viz*. ***(i)*** Ungrounded enclosure ***(ii)*** enclosure connected to neutral wire ***(iii)*** ground wire connected to enclosure.

(i) **Ungrounded enclosure.** Fig. 26.1 shows the case of ungrounded metal enclosure. If a person touches the metal enclosure, nothing will happen if the equipment is functioning correctly. But if the winding insulation becomes faulty, the resistance R_e between the motor and enclosure drops to a low value (a few hundred ohms or less). A person having a body resistance R_b would complete the current path as shown in Fig. 26.1.

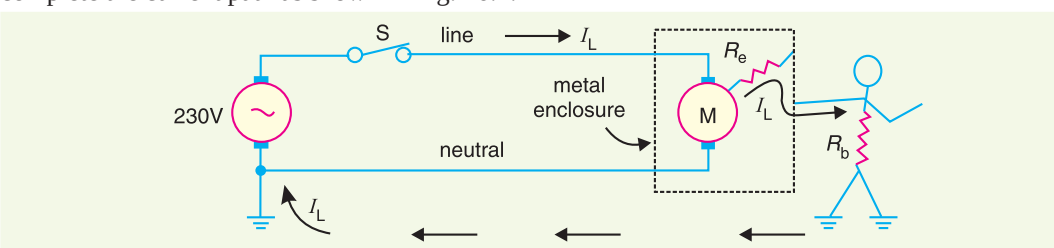

Fig. 26.1

If R_e is small (as is usually the case when insulation failure of winding occurs), the leakage current I_L through the person's body could be dangerously high. As a result, the person would get

severe *electric shock which may be fatal. Therefore, this system is unsafe.

***(ii)* Enclosure connected to neutral wire.** It may appear that the above problem can be solved by connecting the enclosure to the grounded neutral wire as shown in Fig. 26.2. Now the leakage current I_L flows from the motor, through the enclosure and straight back to the neutral wire (See Fig. 26.2). Therefore, the enclosure remains at earth potential. Consequently, the operator would not experience any electric shock.

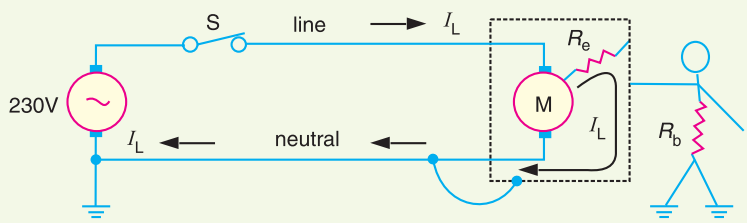

Fig. 26.2

The trouble with this method is that the neutral wire may become open either accidentally or due to a faulty installation. For example, if the switch is inadvertently in series with the neutral rather than the live wire (See Fig. 26.3), the motor can still be turned on and off. However, if someone touched the enclosure while the motor is *off*, he would receive a severe electric shock (See Fig. 26.3). It is because when the motor is off, the potential of the enclosure rises to that of the live conductor.

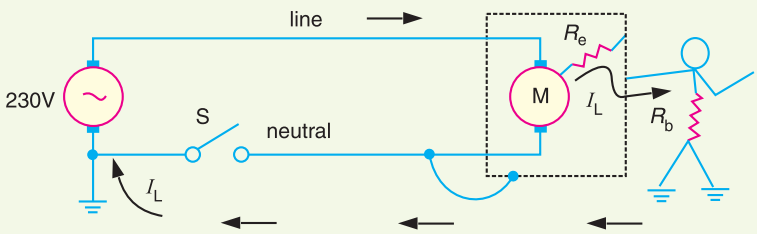

Fig. 26.3

***(iii)* Ground wire connected to enclosure.** To get rid of this problem, we install a third wire, called *ground wire,* between the enclosure and the system ground as shown in Fig. 26.4. The ground wire may be bare or insulated. If it is insulated, it is coloured green.

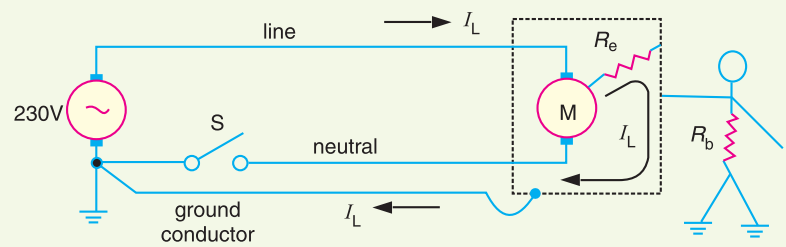

Fig. 26.4

* **Electric shock.** It is generally believed that currents below 5 mA are not dangerous. Between 10 mA and 20 mA, the current is dangerous because the victim loses muscular control. The resistance of the human body, taken between two hands or between one hand and a leg ranges from 500 Ω to 50 kΩ. If the resistance of human body is assumed to be 20 kΩ, then momentary contact with a 230 V line can be potentially fatal.

$$I_L = \frac{230\text{ V}}{20\text{ k}\Omega} = 11{\cdot}5\text{ mA}$$

Electrical outlets have three contacts — one for live wire, one for neutral wire and one for ground wire.

26.3 System Grounding

The process of connecting some electrical part of the power system (e.g. neutral point of a star-connected system, one conductor of the secondary of a transformer etc.) to earth (i.e. soil) is called **system grounding.**

The system grounding has assumed considerable importance in the fast expanding power system. By adopting proper schemes of system grounding, we can achieve many advantages including protection, reliability and safety to the power system network. But before discussing the various aspects of *neutral grounding*, it is desirable to give two examples to appreciate the need of system grounding.

(*i*) Fig. 26.5 (*i*) shows the primary winding of a distribution transformer connected between the line and neutral of a 11 kV line. If the secondary conductors are *ungrounded*, it would appear that a person could touch either secondary conductor without harm because there is no ground return. However, this is not true. Referring to Fig. 26.5, there is capacitance C_1 between primary and secondary and capacitance C_2 between secondary and ground. This capacitance coupling can produce a high voltage between the secondary lines and the ground. Depending upon the relative magnitudes of C_1 and C_2, it may be as high as 20% to 40% of the primary voltage. If a person touches either one of the secondary wires, the resulting capacitive current I_C flowing through the body could be dangerous even in case of small transformers [See Fig. 26.5(*ii*)]. For example, if I_C is only 20 mA, the person may get a fatal electric shock.

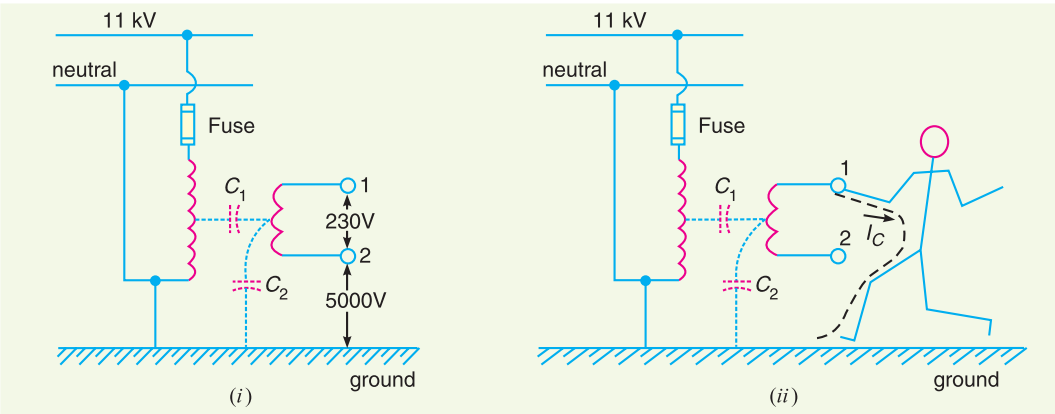

Fig. 26.5

If one of the secondary conductors is grounded, the capacitive coupling almost reduces to zero and so is the capacitive current I_C. As a result, the person will experience no electric shock. This explains the importance of system grounding.

(*ii*) Let us now turn to a more serious situation. Fig. 26.6 (*i*) shows the primary winding of a distribution transformer connected between the line and neutral of a 11 kV line. The secondary conductors are ungrounded. Suppose that the high voltage line (11 kV in this case) touches the 230 V conductor as shown in Fig. 26.6 (*i*). This could be caused by an internal fault in the transformer or by a branch or tree falling across the 11 kV and 230 V lines. Under these circumstances, a very high voltage is imposed between the secondary conductors and ground. This would immediately puncture the 230 V insulation, causing a massive flashover. This flashover could occur anywhere on the secondary network, possibly inside

a home or factory. Therefore, ungrounded secondary in this case is a potential fire hazard and may produce grave accidents under abnormal conditions.

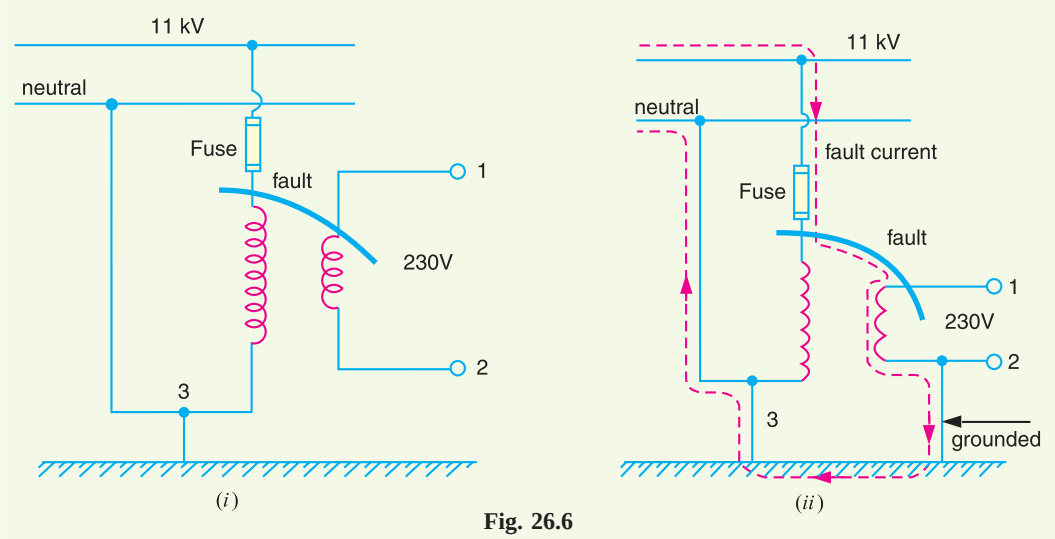

Fig. 26.6

If one of the secondary lines is grounded as shown in Fig. 26.6(*ii*), the accidental contact between a 11 kV conductor and a 230 V conductor produces a dead short. The short-circuit current (*i.e.* fault current) follows the dotted path shown in Fig. 26.6 (*ii*). This large current will blow the fuse on the 11 kV side, thus disconnecting the transformer and secondary distribution system from the 11 kV line. This explains the importance of system grounding in the line of the power system.

26.4 Ungrounded Neutral System

In an ungrounded neutral system, the neutral is not connected to the ground *i.e.* the neutral is isolated from the ground. Therefore, this system is also called *isolated neutral system* or *free neutral system.* Fig. 26.7 shows ungrounded neutral system. The line conductors have capacitances between one another and to ground. The former are delta-connected while the latter are star-connected. The delta-connected capacitances have little effect on the grounding characteristics of the system (*i.e.* these capacitances do not effect the earth circuit) and, therefore, can be neglected. The circuit then reduces to the one shown in Fig. 26.8(*i*).

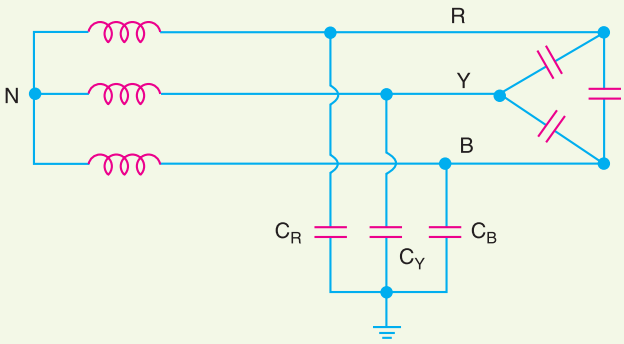

Fig. 26.7

Circuit behaviour under normal conditions. Let us discuss the behaviour of ungrounded neutral system under normal conditions (*i.e.* under steady state and balanced conditions). The line is assumed to be perfectly transposed so that each conductor has the same capacitance to ground.

Therefore, $C_R = C_Y = C_B = C$ (say). Since the phase voltages V_{RN}, V_{YN} and V_{BN} have the same magnitude (of course, displaced 120° from one another), the capacitive currents I_R, I_Y and I_B will have the same value *i.e.*

$$I_R = I_Y = I_B = \frac{V_{ph}}{X_C} \quad \text{.... in magnitude}$$

where V_{ph} = Phase voltage (*i.e.* line-to-neutral voltage)

X_C = Capacitive reactance of the line to ground.

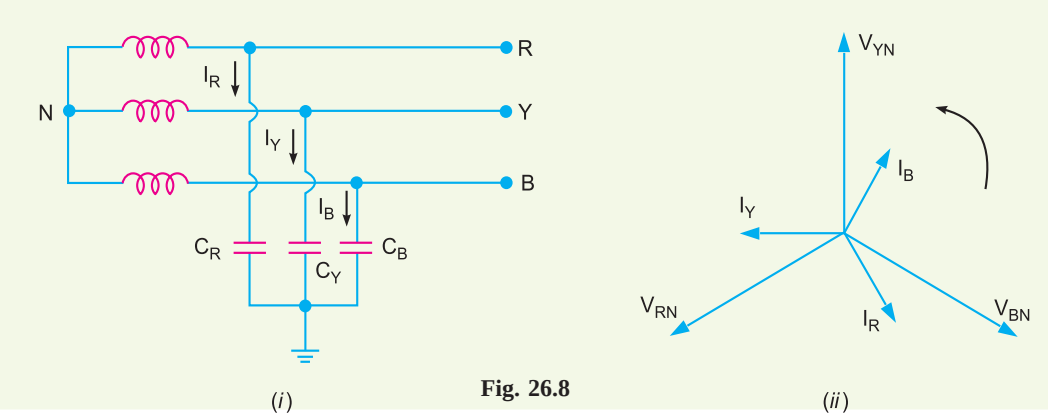

Fig. 26.8

The capacitive currents I_R, I_Y and I_B lead their respective phase voltages V_{RN}, V_{YN} and V_{BN} by 90° as shown in the phasor diagram in Fig. 26.8(*ii*). The three capacitive currents are equal in magnitude and are displaced 120° from each other. Therefore, their phasor sum is zero. As a result, no current flows to ground and the *potential of neutral is the same as the ground potential.* Therefore, ungrounded neutral system poses no problems under normal conditions. However, as we shall see, currents and voltages are greatly influenced during fault conditions.

Circuit behaviour under single line to ground-fault. Let us discuss the behaviour of ungrounded neutral system when single line to ground fault occurs. Suppose line to ground fault occurs in line *B* at some point *F*. The *circuit then becomes as shown in Fig. 26.9(*i*). The capacitive currents I_R and I_Y flow through the lines *R* and *Y* respectively. The voltages driving I_R and I_Y are V_{BR} and V_{BY} respectively. Note that V_{BR} and V_{BY} are the line voltages [See Fig. 26.9 (*ii*)]. The paths of I_R and I_Y are essentially capacitive. Therefore, I_R leads V_{BR} by 90° and I_Y leads V_{BY} by 90° as shown in Fig. 26.9 (*ii*). The capacitive fault current I_C in line *B* is the phasor sum of I_R and I_Y.

Fault current in line *B*, $I_C = I_R + I_Y$ .... Phasor sum

Now, $$I_R = \frac{V_{BR}}{X_C} = \frac{\sqrt{3}\,V_{ph}}{X_C}$$

and $$I_Y = \frac{V_{BY}}{X_C} = \frac{\sqrt{3}\,V_{ph}}{X_C}$$

$$\therefore \quad I_R = I_Y = \frac{\sqrt{3}\,V_{ph}}{X_C}$$

* Due to line-to-ground fault in line *B*, the potential of phase *B* becomes equal to the ground potential. This short circuits the capacitance of this line (*i.e.* capacitance C_B). Hence no capacitive current flows through C_B.

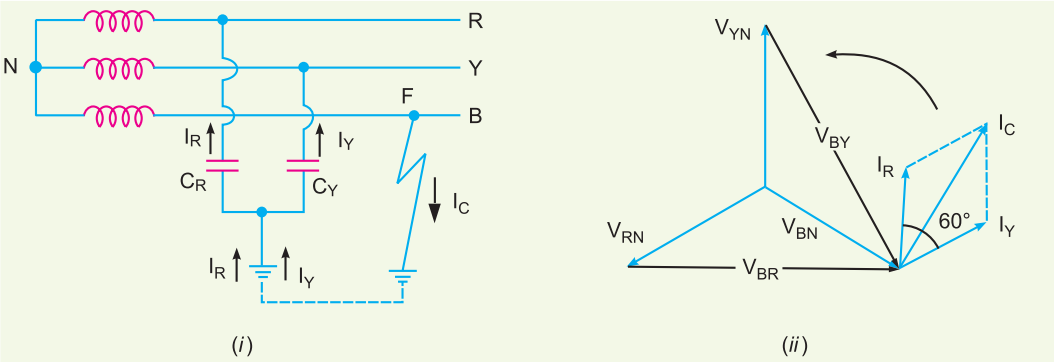

Fig. 26.9

$$= \sqrt{3} \times \text{Per phase capacitive current under normal conditions}$$

Capacitive fault current in line B is

$$I_C = \text{Phasor sum of } I_R \text{ and } I_Y$$

$$= \dagger \sqrt{3}\, I_R = \sqrt{3} \times \frac{\sqrt{3}\, V_{ph}}{X_C} = \frac{3V_{ph}}{X_C}$$

$$\therefore \quad I_C = \frac{3V_{ph}}{X_C} = 3 \times \frac{V_{ph}}{X_C}$$

$$= 3 \times \text{Per phase capacitive current under normal conditions}$$

Therefore, when single line to ground fault occurs on an ungrounded neutral system, the following effects are produced in the system:

(*i*) The potential of the faulty phase becomes equal to ground potential. However, the voltages of the two remaining healthy phases rise from their normal phase voltages to full line value. This may result in insulation breakdown.

(*ii*) The capacitive current in the two healthy phases increase to $\sqrt{3}$ times the normal value.

(*iii*) The capacitive fault current (I_C) becomes 3 times the normal per phase capacitive current.

(*iv*) This system cannot provide adequate protection against earth faults. It is because the capacitive fault current is small in magnitude and cannot operate protective devices.

(*v*) The capacitive fault current I_C flows into earth. Experience shows that I_C in excess of 4A is sufficient to maintain an arc in the ionized path of the fault. If this current is once maintained, it may exist even after the earth fault is cleared. This phenomenon of *persistent arc is called *arcing ground*. Due to arcing ground, the system capacity is charged and discharged in a cyclic order. This sets up high-frequency oscillations on the whole system and the phase voltage of healthy conductors may rise to 5 to 6 times its normal value. The overvoltages in healthy conductors may damage the insulation in the line.

---

† Referring to Fig. 26.9(*ii*), the magnitudes of I_R and I_Y are equal and the angle between them is 60°. Therefore, the resultant capacitive fault current I_C is given by:

$$I_C = 2I_R \cos 60°/2 = 2I_R \cos 30° = 2\, I_R \times \sqrt{3}/2 = \sqrt{3}\, I_R.$$

* When the arc is formed, the voltage across it becomes zero and the arc is extinguished. As a result, the potential of the faulty conductor is restored and the formation of second arc takes place. This phenomenon of intermittent arcing is called arcing ground.

Due to above disadvantages, ungrounded neutral system is not used these days. The modern high-voltage 3-phase systems employ grounded neutral owing to a number of advantages.

26.5 Neutral Grounding

The process of connecting neutral point of 3-phase system to earth (i.e. soil) either directly or through some circuit element (e.g. resistance, reactance etc.) is called **neutral grounding.**

Neutral grounding provides protection to personal and equipment. It is because during earth fault, the current path is completed through the earthed neutral and the protective devices (*e.g.* a fuse etc.) operate to isolate the faulty conductor from the rest of the system. This point is illustrated in Fig. 26.10.

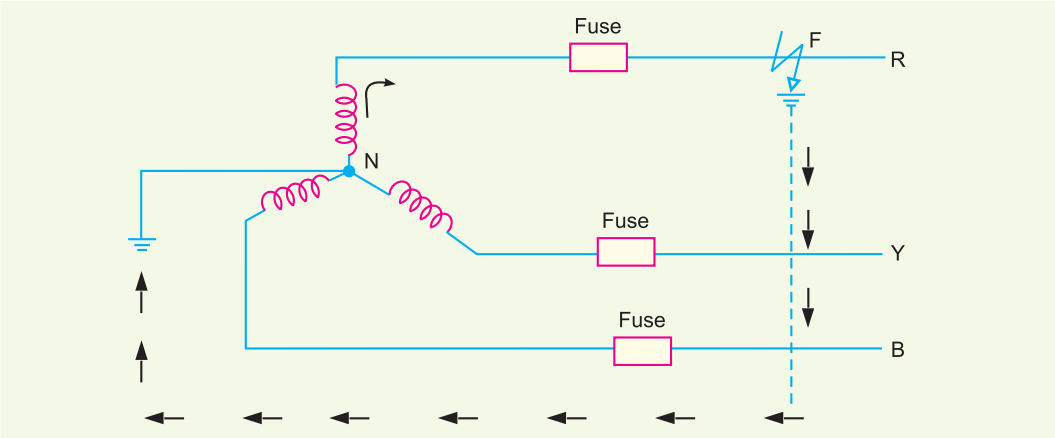

Fig. 26.10

Fig. 26.10 shows a 3-phase, star-connected system with neutral earthed (*i.e.* neutral point is connected to soil). Suppose a single line to ground fault occurs in line *R* at point *F*. This will cause the current to flow through ground path as shown in Fig. 26.10. Note that current flows from *R*-phase to earth, then to neutral point *N* and back to *R*-phase. Since the impedance of the current path is low, a large current flows through this path. This large current will blow the fuse in *R*-phase and isolate the faulty line *R*. This will protect the system from the harmful effects (*e.g.* damage to equipment, electric shock to personnel etc.) of the fault. One important feature of grounded neutral is that the potential difference between the live conductor and ground will not exceed the phase voltage of the system *i.e.* it will remain nearly constant.

26.6 Advantages of Neutral Grounding

The following are the advantages of neutral grounding :

(*i*) Voltages of the healthy phases do not exceed line to ground voltages *i.e.* they remain nearly constant.

(*ii*) The high voltages due to arcing grounds are eliminated.

(*iii*) The protective relays can be used to provide protection against earth faults. In case earth fault occurs on any line, the protective relay will operate to isolate the faulty line.

(*iv*) The overvoltages due to lightning are discharged to earth.

(*v*) It provides greater safety to personnel and equipment.

(*vi*) It provides improved service reliability.

(*vii*) Operating and maintenance expenditures are reduced.

Note : It is interesting to mention here that ungrounded neutral has the following advantages :

(*i*) In case of earth fault on one line, the two healthy phases will continue to supply load for a short period.

(*ii*) Interference with communication lines is reduced because of the absence of zero sequence currents.

The advantages of ungrounded neutral system are of negligible importance as compared to the advantages of the grounded neutral system. Therefore, modern 3-phase systems operate with grounded neutral points.

26.7 Methods of Neutral Grounding

The methods commonly used for grounding the neutral point of a 3-phase system are :

(*i*) Solid or effective grounding (*ii*) Resistance grounding

(*iii*) Reactance grounding (*iv*) Peterson-coil grounding

The choice of the method of grounding depends upon many factors including the size of the system, system voltage and the scheme of protection to be used.

26.8 Solid Grounding

*When the neutral point of a 3-phase system (e.g. 3-phase generator, 3-phase transformer etc.) is directly *connected to earth (i.e. soil) through a wire of negligible resistance and reactance, it is called* **solid grounding** *or* **effective grounding**.

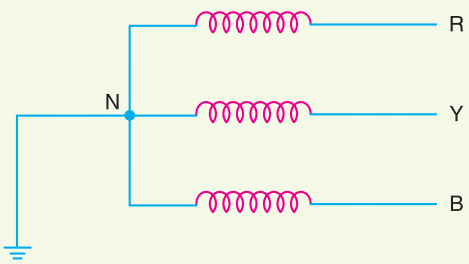

Fig. 26.11

Fig. 26.11 shows the solid grounding of the neutral point. Since the neutral point is directly connected to earth through a wire, the neutral point is held at earth potential under all conditions. Therefore, under fault conditions, the voltage of any conductor to earth will not exceed the normal phase voltage of the system.

Advantages. The solid grounding of neutral point has the following advantages :

(*i*) The neutral is effectively held at earth potential.

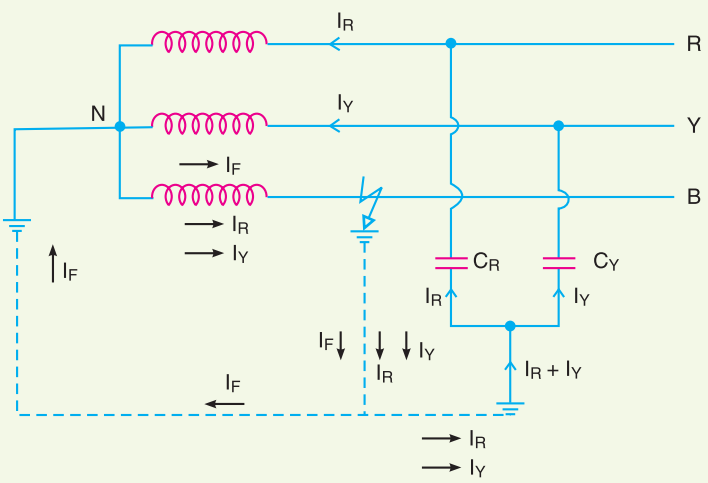

Fig. 26.12

* This is a metallic connection made from the neutral of the system to one or more earth electrodes consisting of plates, rods or pipes buried in the ground.

(*ii*) When earth fault occurs on any phase, the resultant capacitive current I_C is in phase opposition to the fault current I_F. The two currents completely cancel each other. Therefore, no arcing ground or over-voltage conditions can occur. Consider a line to ground fault in line *B* as shown in Fig. 26.12. The capacitive currents flowing in the healthy phases *R* and *Y* are I_R and I_Y respectively. The resultant capacitive current I_C is the phasor sum of I_R and I_Y. In addition to these capacitive currents, the power source also supplies the fault current I_F. This fault current will go from fault point to earth, then to neutral point *N* and back to the fault point through the faulty phase. The path of I_C is capacitive and that of I_F is *inductive. The two currents are in phase opposition and completely cancel each other. Therefore, no arcing ground phenomenon or over-voltage conditions can occur.

(*iii*) When there is an earth fault on any phase of the system, the phase to earth voltage of the faulty phase becomes zero. However, the phase to earth voltages of the remaining two healthy phases remain at normal phase voltage because the potential of the neutral is fixed at earth potential. This permits to insulate the equipment for phase voltage. Therefore, there is a saving in the cost of equipment.

(*iv*) It becomes easier to protect the system from earth faults which frequently occur on the system. When there is an earth fault on any phase of the system, a large fault current flows between the fault point and the grounded neutral. This permits the easy operation of earth-fault relay.

Disadvantages. The following are the disadvantages of solid grounding :

(*i*) Since most of the faults on an overhead system are phase to earth faults, the system has to bear a large number of severe shocks. This causes the system to become unstable.

(*ii*) The solid grounding results in heavy earth fault currents. Since the fault has to be cleared by the circuit breakers, the heavy earth fault currents may cause the burning of circuit breaker contacts.

(*iii*) The increased earth fault current results in greater interference in the neighbouring communication lines.

Applications. Solid grounding is usually employed where the circuit impedance is sufficiently high so as to keep the earth fault current within safe limits. This system of grounding is used for voltages upto 33 kV with total power capacity not exceeding 5000 kVA.

26.9 Resistance Grounding

In order to limit the magnitude of earth fault current, it is a common practice to connect the neutral point of a 3-phase system to earth through a resistor. This is called *resistance grounding*.

When the neutral point of a 3-phase system (e.g. 3-phase generator, 3-phase transformer etc.) is connected to earth (i.e. soil) through a resistor, it is called **resistance grounding.**

Fig. 26.13 shows the grounding of neutral point through a **resistor *R*. The value of *R* should neither be very low nor very high. If the value of earthing resistance *R* is very low, the earth fault current will be large and the system becomes similar to the solid grounding system. On the other hand, if the earthing resistance *R* is very high, the system conditions become similar to ungrounded

* By symmetrical components, the fault current I_F is given by :

$$I_F = \frac{3V_{ph}}{Z_1 + Z_2 + Z_0}$$

Since $Z_1 + Z_2 + Z_0$ is predominantly inductive, I_F lags behind the phase to neutral voltage of the faulted phase by nearly 90°.

** It may be a metallic resistor or liquid resistor. Metallic resistors do not change with time and practically require no maintenance. However, a metallic resistor is slightly inductive and this poses a problem with overhead lines exposed to lightning, Liquid resistors are free from this disadvantage.

neutral system. The value of R is so chosen such that the earth fault current is limited to safe value but still sufficient to permit the operation of earth fault protection system. In practice, that value of R is selected that limits the earth fault current to 2 times the normal full load current of the earthed generator or transformer.

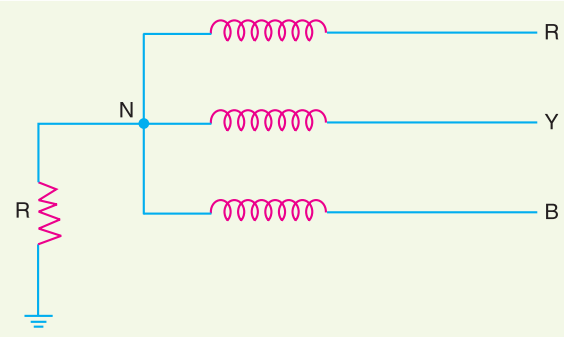

Fig. 26.13

Advantages. The following are the advantages of resistance earthing:

(*i*) By adjusting the value of R, the arcing grounds can be minimised. Suppose earth fault occurs in phase B as shown in Fig. 26.14. The capacitive currents I_R and I_Y flow in the healthy phases R and Y respectively. The fault current I_F lags behind the phase voltage of the faulted phase by a certain angle depending upon the earthing resistance R and the reactance of the system upto the point of fault. The fault current I_F can be resolved into two components *viz*.

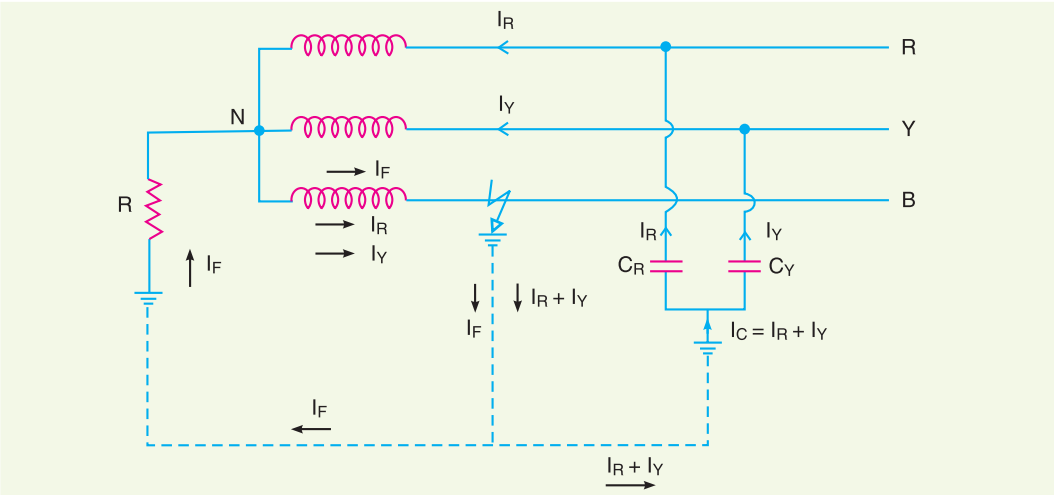

Fig. 26.14

(*a*) I_{F1} in phase with the faulty phase voltage.

(*b*) I_{F2} lagging behind the faulty phase voltage by 90°.

The lagging component I_{F2} is in phase opposition to the total capacitive current I_C. If the value of earthing resistance R is so adjusted that $I_{F2} = I_C$, the arcing ground is completely eliminated and the operation of the system becomes that of solidly grounded system. However, if R is so adjusted that $I_{F2} < I_C$, the operation of the system becomes that of ungrounded neutral system.

(*ii*) The earth fault current is small due to the presence of earthing resistance. Therefore, interference with communication circuits is reduced.

(*iii*) It improves the stability of the system.

Disadvantages. The following are the disadvantages of resistance grounding :

(*i*) Since the system neutral is displaced during earth faults, the equipment has to be insulated for higher voltages.

(*ii*) This system is costlier than the solidly grounded system.

(*iii*) A large amount of energy is produced in the earthing resistance during earth faults. Sometimes it becomes difficult to dissipate this energy to atmosphere.

Applications. It is used on a system operating at voltages between 2.2 kV and 33 kV with power source capacity more than 5000 kVA.

26.10 Reactance Grounding

In this system, a reactance is inserted between the neutral and ground as shown in Fig. 26.15. The purpose of reactance is to limit the earth fault current. By changing the earthing reactance, the earth fault current can to changed to obtain the conditions similar to that of solid grounding. This method is not used these days because of the following disadvantages :

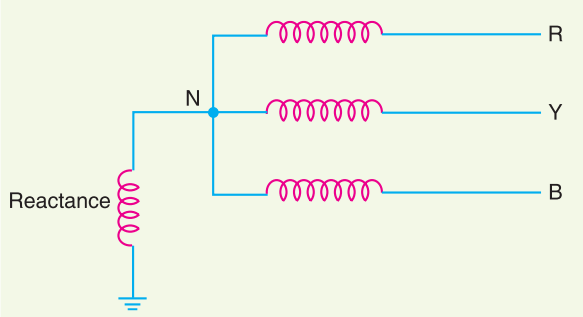

Fig. 26.15

(*i*) In this system, the fault current required to operate the protective device is higher than that of resistance grounding for the same fault conditions.

(*ii*) High transient voltages appear under fault conditions.

26.11 *Arc Suppression Coil Grounding (or Resonant Grounding)

We have seen that capacitive currents are responsible for producing arcing grounds. These capacitive currents flow because capacitance exists between each line and earth. If inductance L of appropriate value is connected in parallel with the capacitance of the system, the fault current I_F flowing through L will be in phase opposition to the capacitive current I_C of the system. If L is so adjusted that $I_L = I_C$, then resultant current in the fault will be zero. This condition is known as *resonant grounding*.

When the value of L of arc suppression coil is such that the fault current I_F exactly balances the capacitive current I_C, it is called **resonant grounding**.

Circuit details. An arc suppression coil (also called Peterson coil) is an iron-cored coil connected between the neutral and earth as shown in Fig. 26.16(*i*). The reactor is provided with tappings to change the inductance of the coil. By adjusting the tappings on the coil, the coil can be tuned with the capacitance of the system i.e. resonant grounding can be achieved.

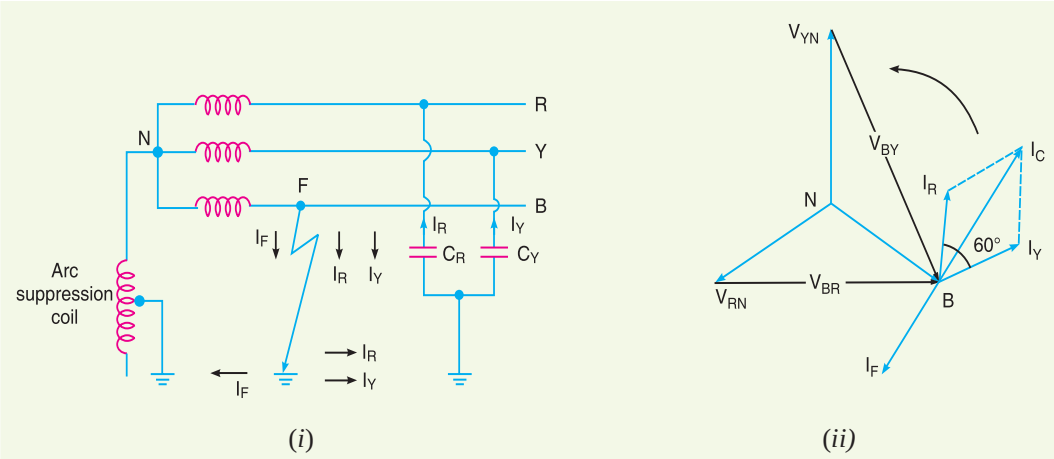

Fig. 26.16

* Also called **Peterson coil grounding.**

Operation. Fig. 26.16(*i*) shows the 3-phase system employing Peterson coil grounding. Suppose line to ground fault occurs in the line *B* at point *F*. The fault current I_F and capacitive currents I_R and I_Y will flow as shown in Fig. 26.16(*i*). Note that I_F flows through the Peterson coil (or Arc suppression coil) to neutral and back through the fault. The total capacitive current I_C is the phasor sum of I_R and I_Y as shown in phasor diagram in Fig. 26.16(*ii*). The voltage of the faulty phase is applied across the arc suppression coil. Therefore, fault current I_F lags the faulty phase voltage by 90°. The current I_F is in phase opposition to capacitive current I_C [See Fig. 26.16(*ii*)]. By adjusting the tappings on the Peterson coil, the resultant current in the fault can be reduced. If inductance of the coil is so adjusted that $I_L = I_C$, then resultant current in the fault will be zero.

Value of L for resonant grounding. For resonant grounding, the system behaves as an ungrounded neutral system. Therefore, full line voltage appears across capacitors C_R and C_Y.

$$\therefore \qquad I_R = I_Y = \frac{\sqrt{3}V_{ph}}{X_C}$$

$$\therefore \qquad I_C = \sqrt{3}\, I_R = \sqrt{3} \times \frac{\sqrt{3}V_{ph}}{X_C} = \frac{3V_{ph}}{X_C}$$

Here, X_C is the line to ground capacitive reactance.

Fault current, $$I_F = \frac{V_{ph}}{X_L}$$

Here, X_L is the inductive reactance of the arc suppression coil.

For resonant grounding, $I_L = I_C$.

$$\text{or} \qquad \frac{V_{ph}}{X_L} = \frac{3V_{ph}}{X_C}$$

$$\text{or} \qquad X_L = \frac{X_C}{3}$$

$$\text{or} \qquad \omega L = \frac{1}{3\omega C}$$

$$\therefore \qquad L = \frac{1}{3\omega^2 C} \qquad \text{...(}i\text{)}$$

Exp. (*i*) gives the value of inductance *L* of the arc suppression coil for resonant grounding.

Advantages. The Peterson coil grounding has the following advantages:

(*i*) The Peterson coil is completely effective in preventing any damage by an arcing ground.

(*ii*) The Peterson coil has the advantages of ungrounded neutral system.

Disadvantages. The Peterson coil grounding has the following disadvantages :

(*i*) Due to varying operational conditions, the capacitance of the network changes from time to time. Therefore, inductance *L* of Peterson coil requires readjustment.

(*ii*) The lines should be transposed.

26.12 Voltage Transformer Earthing

In this method of neutral earthing, the primary of a single-phase voltage transformer is connected between the neutral and the earth as shown in Fig. 26.17. A low resistor in series with a relay is connected across the secondary of the voltage transformer. The voltage transformer provides a high reactance in the neutral earthing circuit and operates virtually as an ungrounded neutral system. An

earth fault on any phase produces a voltage across the relay. This causes the operation of the protective device.

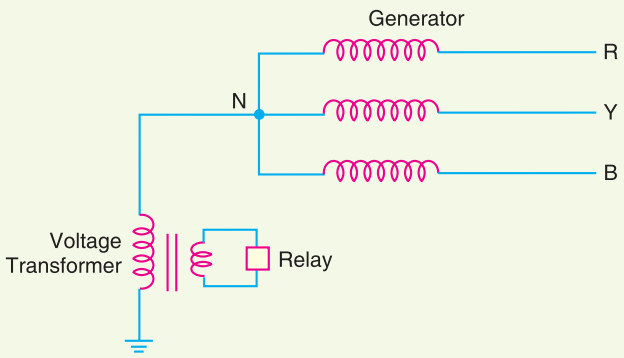

Fig. 26.17

Advantages. The following are the advantages of voltage transformer earthing :

(*i*) The transient overvoltages on the system due to switching and arcing grounds are reduced. It is because voltage transformer provides high reactance to the earth path.

(*ii*) This type of earthing has all the advantages of ungrounded neutral system.

(*iii*) Arcing grounds are eliminated.

Disadvantages. The following are the disadvantages of voltage transformer earthing :

(*i*) When earth fault occurs on any phase, the line voltage appears across line to earth capacitances. The system insulation will be overstressed.

(*ii*) The earthed neutral acts as a reflection point for the travelling waves through the machine winding. This may result in high voltage build up.

Applications. The use of this system of neutral earthing is normally confined to generator equipments which are directly connected to step-up power transformers.

Example 26.1. *Calculate the reactance of Peterson coil suitable for a 33 kV, 3-phase transmission line having a capacitance to earth of each conductor as 4.5 μF. Assume supply frequency to be 50 Hz.*

Solution. Supply frequency, f = 50 Hz

Line to earth capacitance, $C = 4{\cdot}5\ \mu F = 4{\cdot}5 \times 10^{-6}$ F

For Peterson coil grounding, reactance X_L of the Peterson coil should be equal to $X_C/3$ where X_C is line to earth capacitive reactance.

$$\therefore \text{ Reactance of Peterson coil, } X_L = \frac{X_C}{3} = \frac{1}{3\,\omega C} = \frac{1}{3\times 2\pi f \times C}$$

$$= \frac{1}{3\times 2\pi\times 50\times 4{\cdot}5\times 10^{-6}} = \mathbf{235{\cdot}8\,\Omega}$$

Example 26.2. *A 230 kV, 3-phase, 50 Hz, 200 km transmission line has a capacitance to earth of 0·02 μF/km per phase. Calculate the inductance and kVA rating of the Peterson coil used for earthing the above system.*

Solution. Supply frequency, f = 50 Hz

Capacitance of each line to earth, $C = 200 \times 0{\cdot}02 = 4 \times 10^{-6}$ F

Required inductance of Peterson coil is

$$L = \frac{1}{3\omega^2 C}$$

$$= \frac{1}{3\times(2\pi\times 50)^2\times 4\times 10^{-6}} = \mathbf{0{\cdot}85\ H}$$

Current through Peterson coil is

$$I_F = \frac{V_{ph}}{X_L} = \frac{230\times 10^3/\sqrt{3}}{2\pi\times 50\times 0{\cdot}85} = 500\ A$$

Voltage across Peterson coil is

$$V_{ph} = \frac{V_L}{\sqrt{3}} = \frac{230\times 1000}{\sqrt{3}}\ V$$

$\therefore$ Rating of Peterson coil $= V_{ph}\times I_F = \dfrac{230\times 1000}{\sqrt{3}}\times 500\times\dfrac{1}{1000}$ **kVA = 66397 kVA**

Example 26.3. *A 50 Hz overhead line has line to earth capacitance of 1.2 μF. It is desired to use *earth fault neutralizer. Determine the reactance to neutralize the capacitance of (i) 100% of the length of the line (ii) 90% of the length of the line and (iii) 80% of the length of the line.*

Solution.

(*i*) Inductive reactance of the coil to neutralize capacitance of 100% of the length of the line is

$$X_L = \frac{1}{3\omega C} = \frac{1}{3\times 2\pi\times 50\times 1{\cdot}2\times 10^{-6}} = \mathbf{884{\cdot}19\Omega}$$

(*ii*) Inductive reactance of the coil to neutralize capacitance of 90% of the length of the line is

$$X_L = \frac{1}{3\omega\times 0{\cdot}9C} = \frac{1}{3\times 2\pi\times 50\times 0{\cdot}9\times 1{\cdot}2\times 10^{-6}} = \mathbf{982{\cdot}43\Omega}$$

(*iii*) Inductive reactance of the coil to neutralize capacitance of 80% of the length of the line is

$$X_L = \frac{1}{3\omega\times 0{\cdot}8C} = \frac{1}{3\times 2\pi\times 50\times 0{\cdot}8\times 1{\cdot}2\times 10^{-6}} = \mathbf{1105{\cdot}24\Omega}$$

Example 26.4. *A 132 kV, 3-phase, 50 Hz transmission line 200 km long consists of three conductors of effective diameter 20 mm arranged in a vertical plane with 4 m spacing and regularly transposed. Find the inductance and kVA rating of the arc suppression coil in the system.*

Solution. Radius of conductor, $r = 20/2 = 10$ mm $= 0{\cdot}01$ m

Conductor spacing, $d = 4m$

$\therefore$ Capacitance between phase and neutral or earth

$$= \frac{2\pi\varepsilon_0}{\log_e \frac{d}{r}}\ F/m = \frac{2\pi\times 8{\cdot}885\times 10^{-12}}{\log_e \frac{4}{0{\cdot}01}} = 9{\cdot}285\times 10^{-12}\ \text{F/m}$$

$$= 9{\cdot}285\times 10^{-12}\times 10^3\ \text{F/km} = 9{\cdot}285\times 10^{-9}\ \text{F/km}$$

$\therefore$ Capacitance C between phase and earth for 200 km line is

* Note that Peterson coil is also known as earth fault neutralizer.

$$C = 200 \times 9{\cdot}285 \times 10^{-9} = 18{\cdot}57 \times 10^{-7}\ F$$

The required inductance L of the arc suppression coil is

$$L = \frac{1}{3\omega^2 C} = \frac{1}{3\times(2\pi\times50)^2\times18{\cdot}57\times10^{-7}} = \mathbf{1{\cdot}82H}$$

Current through the coil, $I_F = \dfrac{V_{ph}}{X_L} = \dfrac{132\times10^3/\sqrt{3}}{2\pi\times50\times1{\cdot}82} = 132A$

$\therefore$ Rating of the coil $= V_{ph} \times I_F = \dfrac{132}{\sqrt{3}} \times 132 =$ **10060 kVA**

TUTORIAL PROBLEMS

1. A 132 kV, 3-phase, 50 Hz transmission line 192 km long consists of three conductors of effective diameter 20 mm, arranged in a vertical plane with 4 m spacing and regularly transposed. Find the inductance and MVA rating of the arc suppression coil in the system. **[1·97H; 9·389 MVA]**
2. A 33 kV, 50 Hz network has a capacitance to neutral of 1·0 μF per phase. Calculate the reactance of an arc suppression coil suitable for the system to avoid adverse effect of arching ground. **[1061Ω]**
3. A transmission line has a capacitance of 0·1 μF per phase. Determine the inductance of Peterson coil to neutralize the effect of capacitance of (*i*) complete length of the line, (*ii*) 97% of the line, (*iii*) 90% length of the line. The supply frequency is 50 Hz. **[(*i*) 33·80H (*ii*) 34·84H (*iii*) 37·55H]**

26.13 Grounding Transformer

We sometimes have to create a neutral point on a 3-phase, 3-wire system (e.g. delta connection etc.) to change it into 3-phase, 4-wire system. This can be done by means of a *grounding transformer.* It is a core type transformer having three limbs built in the same fashion as that of the power transformer. Each limb of the transformer has two identical windings wound differentially (i.e. directions of current in the two windings on each limb are opposite to each other) as shown in Fig. 26.18. Under normal operating conditions, the total flux in each limb is negligibly small. Therefore, the transformer draws very small magnetising current.

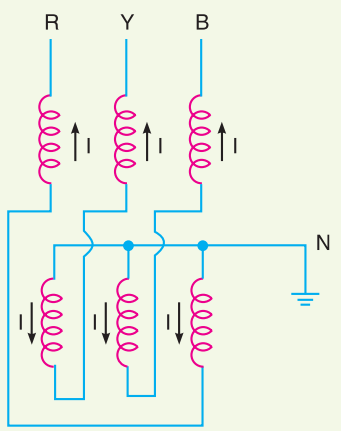

Fig. 26.18

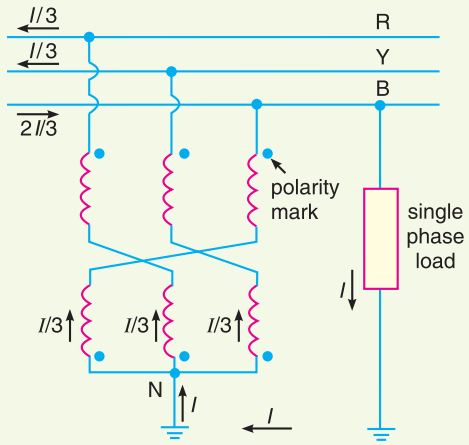

Fig. 26.19

Fig. 26.19 shows the use of grounding transformer to create neutral point N. If we connect a single-phase load between one line and neutral, the load current I divides into three equal currents in each winding. Because the currents are equal, the neutral point stays fixed and the line to neutral

voltages remain balanced as they would be on a regular 4-wire system. In practice, the single-phase loads are distributed as evenly as possible between the three phases and neutral so that unbalanced load current I is relatively small.

The impedance of grounding transformer is quite low. Therefore, when line to earth fault occurs, the fault current will be quite high. The magnitude of fault current is limited by inserting a resistance (not shown in the figure) in the neutral circuit. Under normal conditions, only iron losses will be continuously occurring in the grounding transformer. However, in case of fault, the high fault current will also produce copper losses in the transformer. Since the duration of the fault current is generally between 30-60 seconds, the copper losses will occur only for a short interval.

Grounded Transformer

SELF - TEST

1. Fill in the blanks by inserting appropriate words/figures :

(*i*) When single line to earth fault occurs on an ungrounded neutral system, the voltages of the healthy phases (other than the faulty phase) rise from their normal phase voltages to ..... .

(*ii*) When single line to earth fault occurs on an ungrounded neutral system, the capacitive current in the two healthy phases rises to ..... times the normal value.

(*iii*) When single line to earth fault occurs on an ungrounded neutral system, the capacitive fault current becomes ..... times the normal per phase capacitive current.

(*iv*) In Peterson coil grounding, inductance L of the coil is related to line to earth capacitance C as .....

(*v*) When single line to earth fault occurs in solid grounding system, the phase to earth voltage of the remaining two healthy phases remain at ..... .

2. Pick up the correct words/figures from brackets and fill in the blanks.

(*i*) The ungrounded neutral system cannot provide adequate protection against earth faults because the capacitive fault current is ..... (*small, very large*)

(*ii*) In Peterson coil grounding, when inductive fault current becomes equal to capacitive current of the system, then ..... ($X_C = 3X_L$; $X_L = 3X_C$)

(*iii*) In voltage transformer grounding ..... of single phase transformer is connected between neutral and earth. (*secondary, primary*)

(*iv*) In equipment grounding, the enclosure is connected to ..... wire. (*ground, neutral*)

(*v*) The ground wire is coloured ..... . (*black, green*)

(*vi*) The neutral wire is coloured ..... . (*black, green*)

(*vii*) In Peterson coil grounding, the inductance of the coil is ..... . (*fixed, variable*)

(*viii*) In case of earth fault, the ungrounded neutral system ..... lead to arcing ground. (*does, does not*)

(*ix*) Grounding transformer is used where neutral ..... available. (*is, is not*)

(*x*) Most of the faults on an overhead system are .....faults.(*phase to earth, phase to phase*)

ANSWERS TO SELF-TEST

1. (*i*) line value (*ii*) $\sqrt{3}$ (*iii*) 3 (*iv*) $L = \frac{1}{3\omega^2 C}$ (*v*) normal phase voltage
2. (*i*) small (*ii*) $X_C = 3X_L$ (*iii*) primary (*iv*) ground (*v*) green (*vi*) black (*vii*) variable (*viii*) does (*ix*) is not (*x*) phase to earth

CHAPTER REVIEW TOPICS

1. What do you mean by grounding or earthing? Explain it with an example.
2. Describe ungrounded or isolated neutral system. What are its disadvantages?
3. What do you mean by equipment grounding?
4. Illustrate the need of equipment grounding.
5. What is neutral grounding?
6. What are the advantages of neutral grounding?
7. What is solid grounding? What are its advantages?
8. What are the disadvantages of solid grounding?
9. What is resistance grounding? What are its advantages and disadvantages?
10. Describe Arc suppression coil grounding.
11. What is resonant grounding?

DISCUSSION QUESTIONS

1. Why is ground wire used in equipment grounding?
2. There is 11 kV/230V single phase transformer. One can notice that one of the secondary conductors is grounded. Why?
3. The H.V. line of a single phase transformer accidently falls on L.V. line. There may be massive flash-over in a home or factory. Why?
4. In an overhead system, most of the faults are single line to ground. Why?
5. What are the factors causing arching grounds?
6. What is the importance of arc suppression coil grounding?
7. Where do we use grounding transformer?

GO To FIRST