CONTENTS

CHAPTER

13

D.C. Distribution

13.1 Types of D.C. Distributors
13.2 D.C. Distribution Calculations
13.3 D.C. Distributor Fed at one End – Concentrated Loading
13.4 Uniformly Loaded Distributor Fed at One End
13.5 Distributor Fed at Both Ends – Concentrated Loading
13.6 Uniformly Loaded Distributor Fed at Both Ends
13.7 Distributor with Both Concentrated and Uniform Loading
13.8 Ring Distributor
13.9 Ring Main Distributor with Interconnector
13.10 3-Wire D.C. System
13.11 Current Distribution in 3-Wire D.C. System
13.12 Balancers in 3-Wire D.C. System
13.13 Boosters
13.14 Comparison of 3-Wire and 2-Wire D.C. Distribution
13.15 Ground Detectors

Introduction

In the beginning of the electrical age, electricity was generated as a direct current and voltages were low. The resistance losses in the lines made it impracticable to transmit and distribute power for more than a few localities of the city. With the development of the transformer, a.c. has taken over the load formerly supplied by d.c. Now-a-days, electrical energy is generated, transmitted and distributed in the form of a.c. as an economical proposition. The transformer permits the transmission and distribution of a.c. power at high voltages. This has greatly reduced the current in the conductors (and hence their sizes) and the resulting line losses.

However, for certain applications, d.c. supply is absolutely necessary. For example, d.c. supply is required for the operation of variable speed machinery (*e.g.* d.c. motors), electro-chemical work and electric traction. For this purpose, a.c. power is converted into d.c. power at the sub-station by using converting machinery *e.g.* mercury are rectifiers, rotary converters and motor-generator sets. The d.c. supply from the

CONTENTS

sub-station is conveyed to the required places for distribution. In this chapter, we shall confine our attention to the various aspects of d.c. distribution.

13.1 Types of D.C. Distributors

The most general method of classifying d.c. distributors is the way they are fed by the feeders. On this basis, d.c. distributors are classified as:

(*i*) Distributor fed at one end

(*ii*) Distributor fed at both ends

(*iii*) Distributor fed at the centre

(*iv*) Ring distributor.

(*i*) **Distributor fed at one end.** In this type of feeding, the distributor is connected to the supply at one end and loads are taken at different points along the length of the distributor. Fig. 13.1 shows the single line diagram of a d.c. distributor *A B* fed at the end *A* (also known as *singly fed distributor*) and loads I_1, I_2 and I_3 tapped off at points *C*, *D* and *E* respectively.

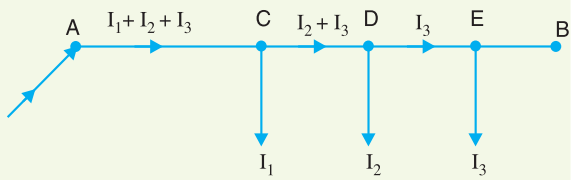

Fig. 13.1

The following points are worth noting in a singly fed distributor :

(*a*) The current in the various sections of the distributor away from feeding point goes on decreasing. Thus current in section *AC* is more than the current in section *CD* and current in section *CD* is more than the current in section *DE*.

(*b*) The voltage across the loads away from the feeding point goes on decreasing. Thus in Fig. 13.1, the minimum voltage occurs at the load point *E*.

(*c*) In case a fault occurs on any section of the distributor, the whole distributor will have to be disconnected from the supply mains. Therefore, continuity of supply is interrupted.

(*ii*) **Distributor fed at both ends.** In this type of feeding, the distributor is connected to the supply mains at both ends and loads are tapped off at different points along the length of the distributor. The voltage at the feeding points may or may not be equal. Fig. 13.2 shows a distributor *A B* fed at the ends *A* and *B* and loads of I_1, I_2 and I_3 tapped off at points *C*, *D* and *E* respectively. Here, the load voltage goes on decreasing as we move away from one feeding point *say A*, reaches minimum value and then again starts rising and reaches maximum value when we reach the other feeding point *B*. The minimum voltage occurs at some load point and is never fixed. It is shifted with the variation of load on different sections of the distributor.

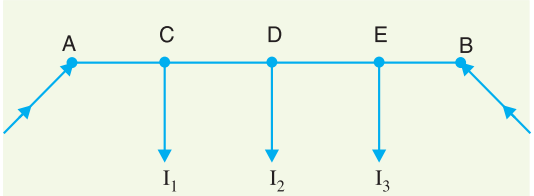

Fig. 13.2

Advantages

(*a*) If a fault occurs on any feeding point of the distributor, the continuity of supply is maintained from the other feeding point.

(*b*) In case of fault on any section of the distributor, the continuity of supply is maintained from the other feeding point.

(*c*) The area of X-section required for a doubly fed distributor is much less than that of a singly fed distributor.

(*iii*) **Distributor fed at the centre.** In this type of feeding, the centre of the distributor is connected to the supply mains as shown in Fig. 13.3. It is equivalent to two singly fed distributors, each distributor having a common feeding point and length equal to half of the total length.

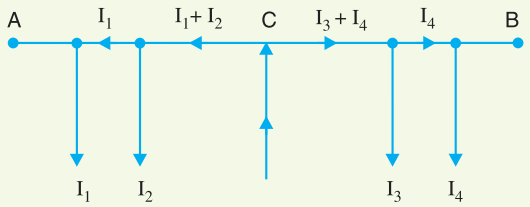

Fig. 13.3

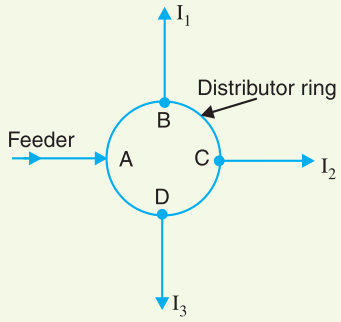

Fig. 13.4

(*iv*) **Ring mains.** In this type, the distributor is in the form of a closed ring as shown in Fig.13.4. It is equivalent to a straight distributor fed at both ends with equal voltages, the two ends being brought together to form a closed ring. The distributor ring may be fed at one or more than one point.

13.2 D.C. Distribution Calculations

D.C. Load

In addition to the methods of feeding discussed above, a distributor may have (*i*) concentrated loading (*ii*) uniform loading (*iii*) both concentrated and uniform loading. The concentrated loads are those which act on particular points of the distributor. A common example of such loads is that tapped off for domestic use. On the other hand, distributed loads are those which act uniformly on all points of the distributor. Ideally, there are no distributed loads. However, a nearest example of distributed load is a large number of loads of same wattage connected to the distributor at equal distances.

In d.c. distribution calculations, one important point of interest is the determination of point of minimum potential on the distributor. The point where it occurs depends upon the loading conditions and the method of feeding the distributor. The distributor is so designed that the minimum potential on it is not less than 6% of rated voltage at the consumer's terminals. In the next sections, we shall discuss some important cases of d.c. distributors separately.

13.3 D.C. Distributor Fed at one End—Concentrated Loading

Fig. 13.5 shows the single line diagram of a 2-wire d.c. distributor *AB* fed at one end *A* and having concentrated loads I_1, I_2, I_3 and I_4 tapped off at points *C*, *D*, *E* and *F* respectively.

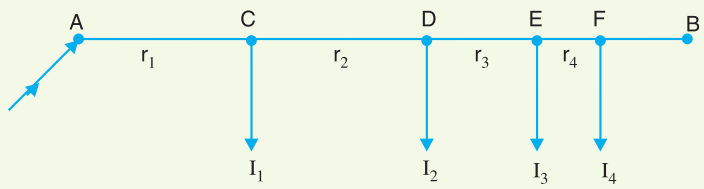

Fig. 13.5

Let r_1, r_2, r_3 and r_4 be the resistances of both wires (go and return) of the sections *AC*, *CD*, *DE* and *EF* of the distributor respectively.

Current fed from point *A* $= I_1 + I_2 + I_3 + I_4$

Current in section *AC* $= I_1 + I_2 + I_3 + I_4$

Current in section *CD* $= I_2 + I_3 + I_4$

Current in section *DE* $= I_3 + I_4$

Current in section *EF* $= I_4$

Voltage drop in section *AC* $= r_1 (I_1 + I_2 + I_3 + I_4)$

Voltage drop in section *CD* $= r_2 (I_2 + I_3 + I_4)$

Voltage drop in section *DE* $= r_3 (I_3 + I_4)$

Voltage drop in section *EF* $= r_4 I_4$

∴ Total voltage drop in the distributor

$$= r_1 (I_1 + I_2 + I_3 + I_4) + r_2 (I_2 + I_3 + I_4) + r_3 (I_3 + I_4) + r_4 I_4$$

It is easy to see that the minimum potential will occur at point *F* which is farthest from the feeding point *A*.

Example 13.1. *A 2-wire d.c. distributor cable AB is 2 km long and supplies loads of 100A, 150A,200A and 50A situated 500 m, 1000 m, 1600 m and 2000 m from the feeding point A. Each conductor has a resistance of 0·01 Ω per 1000 m. Calculate the p.d. at each load point if a p.d. of 300 V is maintained at point A.*

Solution. Fig. 13.6 shows the single line diagram of the distributor with its tapped currents.

Resistance per 1000 m of distributor $= 2 \times 0{\cdot}01 = 0{\cdot}02\,\Omega$

Resistance of section *AC*, $R_{AC} = 0{\cdot}02 \times 500/1000 = 0{\cdot}01\,\Omega$

Resistance of section *CD*, $R_{CD} = 0{\cdot}02 \times 500/1000 = 0{\cdot}01\,\Omega$

Resistance of section *DE*, $R_{DE} = 0{\cdot}02 \times 600/1000 = 0{\cdot}012\,\Omega$

Resistance of section *EB*, $R_{EB} = 0{\cdot}02 \times 400/1000 = 0{\cdot}008\,\Omega$

Referring to Fig. 13.6, the currents in the various sections of the distributor are :

$I_{EB} = 50$ A ; $I_{DE} = 50 + 200 = 250$ A

$I_{CD} = 250 + 150 = 400$ A ; $I_{AC} = 400 + 100 = 500$ A

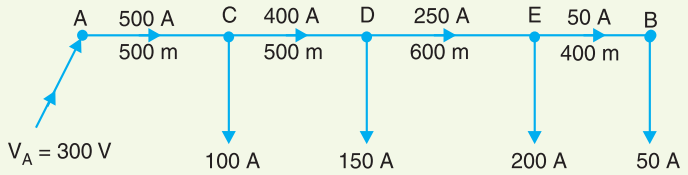

Fig. 13.6

P.D. at load point C, V_C = Voltage at A – Voltage drop in AC

$= V_A - I_{AC} R_{AC}$

$= 300 - 500 \times 0{\cdot}01 =$ **295 V**

P.D. at load point D, $V_D = V_C - I_{CD} R_{CD}$

$= 295 - 400 \times 0{\cdot}01 =$ **291 V**

P.D. at load point E, $V_E = V_D - I_{DE} R_{DE}$

$= 291 - 250 \times 0{\cdot}012 =$ **288 V**

P.D. at load point B, $V_B = V_E - I_{EB} R_{EB}$

$= 288 - 50 \times 0{\cdot}008 =$ **287·6 V**

Example 13.2. *A 2-wire d.c. distributor AB is 300 metres long. It is fed at point A. The various loads and their positions are given below :*

At point	*distance from A in metres*	*concentrated load in amperes*
C	*40*	*30*
D	*100*	*40*
E	*150*	*100*
F	*250*	*50*

If the maximum permissible voltage drop is not to exceed 10 V, find the cross-sectional area of the distributor. Take $\rho = 1{\cdot}78 \times 10^{-8}\ \Omega m$.

Solution. The single line diagram of the distributor along with its tapped currents is shown in Fig. 13.7. Suppose that resistance of 100 m length of the distributor is r ohms. Then resistance of various sections of the distributor is :

$$R_{AC} = 0{\cdot}4\,r\,\Omega \;;\; R_{CD} = 0{\cdot}6\,r\,\Omega \;;\; R_{DE} = 0{\cdot}5\,r\,\Omega \;;\; R_{EF} = r\,\Omega$$

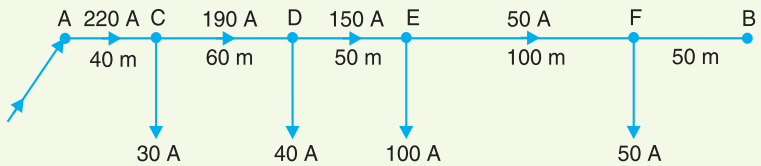

Fig. 13.7

Referring to Fig. 13.7, the currents in the various sections of the distributor are :

$$I_{AC} = 220\text{ A} \;;\; I_{CD} = 190\text{ A} \;;\; I_{DE} = 150\text{ A} \;;\; I_{EF} = 50\text{ A}$$

Total voltage drop over the distributor

$= I_{AC} R_{AC} + I_{CD} R_{CD} + I_{DE} R_{DE} + I_{EF} R_{EF}$

$= 220 \times 0{\cdot}4r + 190 \times 0{\cdot}6r + 150 \times 0{\cdot}5r + 50 \times r$

$= 327\ r$

As the maximum permissible drop in the distributor is 10 V,

$\therefore \quad 10 = 327\ r$

or $r = 10/327 = 0{\cdot}03058\ \Omega$

X-sectional area of conductor $= {}^{*}\dfrac{\rho l}{r/2} = \dfrac{1{\cdot}78\times10^{-8}\times100}{\dfrac{0{\cdot}03058}{2}} = 116{\cdot}4\times10^{-6}\ \text{m}^2 = \mathbf{1{\cdot}164\ cm^2}$

Example 13.3. *Two tram cars (A & B) 2 km and 6 km away from a sub-station return 40 A and 20 A respectively to the rails. The sub-station voltage is 600 V d.c. The resistance of trolley wire is 0·25 Ω/km and that of track is 0·03 Ω/km. Calculate the voltage across each tram car.*

Solution. The tram car operates on d.c. supply. The positive wire is placed overhead while the rail track acts as the negative wire. Fig. 13.8 shows the single line diagram of the arrangement.

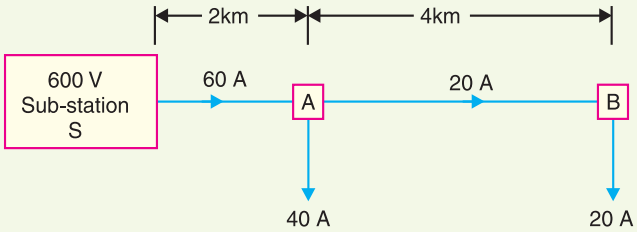

Fig. 13.8

Resistance of trolley wire and track/km

$= 0{\cdot}25 + 0{\cdot}03 = 0{\cdot}28\Omega$

Current in section $SA = 40 + 20 = 60$ A

Current in section $AB = 20$ A

Voltage drop in section $SA = 60\times0{\cdot}28\times2 = 33{\cdot}6$ V

Voltage drop in section $AB = 20\times0{\cdot}28\times4 = 22{\cdot}4$ V

$\therefore$ Voltage across tram $A = 600 - 33{\cdot}6 = \mathbf{566{\cdot}4\ V}$

Voltage across tram $B = 566{\cdot}4 - 22{\cdot}4 = \mathbf{544\ V}$

Example 13.4. *The load distribution on a two-wire d.c. distributor is shown in Fig. 13.9. The cross-sectional area of each conductor is 0·27 cm². The end A is supplied at 250 V. Resistivity of the wire is ρ = 1·78 μ Ω cm. Calculate (i) the current in each section of the conductor (ii) the two-core resistance of each section (iii) the voltage at each tapping point.*

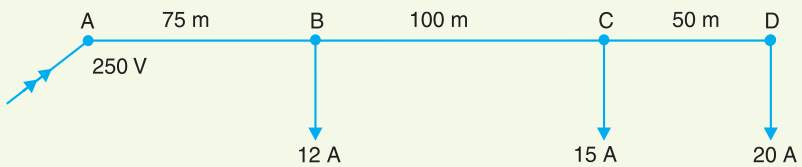

Fig. 13.9

Solution.

(i) Currents in the various sections are :

Section CD, $I_{CD} = \mathbf{20\ A}$; section BC, $I_{BC} = 20 + 15 = \mathbf{35\ A}$

Section AB, $I_{AB} = 20 + 15 + 12 = \mathbf{47\ A}$

(ii) Single-core resistance of the section of 100 m length

$$= \rho\frac{l}{a} = 1{\cdot}78\times10^{-6}\times\frac{100\times100}{0{\cdot}27} = 0{\cdot}066\,\Omega$$

* Note that resistance of each conductor of l = 100 m is $r/2$.

The resistances of the various sections are :

$$R_{AB} = 0{\cdot}066 \times 0{\cdot}75 \times 2 = \mathbf{0{\cdot}099\,\Omega}\ ;\ R_{BC} = 0{\cdot}066 \times 2 = \mathbf{0{\cdot}132\,\Omega}$$

$$R_{CD} = 0{\cdot}066 \times 0{\cdot}5 \times 2 = \mathbf{0{\cdot}066\,\Omega}$$

(*iii*) Voltage at tapping point *B* is

$$V_B = V_A - I_{AB}\,R_{AB} = 250 - 47 \times 0{\cdot}099 = \mathbf{245{\cdot}35\ V}$$

Voltage at tapping point *C* is

$$V_C = V_B - I_{BC}\,R_{BC} = 245{\cdot}35 - 35 \times 0{\cdot}132 = \mathbf{240{\cdot}73\ V}$$

Voltage at tapping point *D* is

$$V_D = V_C - I_{CD}\,R_{CD} = 240{\cdot}73 - 20 \times 0{\cdot}066 = \mathbf{239{\cdot}41\ V}$$

TUTORIAL PROBLEMS

1. What should be the minimum cross-sectional area of each conductor in a two-core cable 100 m long to limit the total voltage drop to 4% of the declared voltage of 250V when the conductors carry 60A ? The resistivity of the conductor is 2·845 μΩ cm. **[0·34 cm^2]**
2. A 2-wire d.c. distributor, 500 m long is fed at one of its ends. The cross-sectional area of each conductor is 3·4 cm^2 and the resistivity of copper is 1·7 μΩcm. The distributor supplies 200 A at a distance of 300m from the feeding point and 100 A at the terminus. Calculate the voltage at the feeding end if the voltage at the terminus is to be 230 V. **[241 V]**
3. A 2-wire d.c. distributor *AB* 500 metres long is fed from point *A* and is loaded as under :

Distance from feeding point *A* (in metres)	100	300	400	500
Load (amperes)	20	40	40	50

If the specific resistance of copper is $1{\cdot}7 \times 10^{-8}$ Ωm, what must be the cross-section of each wire in order that the voltage drop in the distributor shall not exceed 10 volts ? **[1·734 cm^2]**

4. A 2-wire d.c. distributor is 250 m long. It is to be loaded as shown in Fig 13.10 at 50 m intervals. If the maximum voltage drop is not to exceed 10V and the resistivity of core material is 0·7 × 2·54 μΩ cm, determine the maximum cross-sectional area of each conductor. **[1·602 cm^2]**

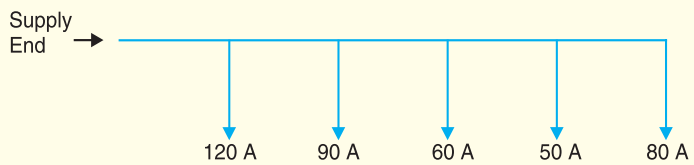

Fig. 13.10

13.4 Uniformly Loaded Distributor Fed at One End

Fig 13.11 shows the single line diagram of a 2-wire d.c. distributor *AB* fed at one end *A* and loaded uniformly with *i* amperes per metre length. It means that at every 1 m length of the distributor, the load tapped is *i* amperes. Let *l* metres be the length of the distributor and *r* ohm be the resistance per metre run.

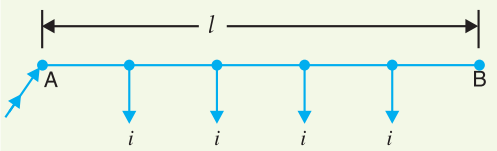

Fig. 13.11

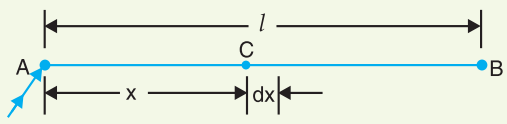

Fig. 13.12

Consider a point *C* on the distributor at a distance *x* metres from the feeding point *A* as shown in Fig. 13.12. Then current at point *C* is

$$= i\,l - i\,x \text{ amperes} = i\,(l - x) \text{ amperes}$$

Now, consider a small length dx near point C. Its resistance is $r\ dx$ and the voltage drop over length dx is

$$dv = i\,(l - x)\,r\,dx = i\,r\,(l - x)\,dx$$

Total voltage drop in the distributor upto point C is

$$v = \int_0^x i\,r\,(l - x)\,dx = i\,r\left(l\,x - \frac{x^2}{2}\right)$$

The voltage drop upto point B (*i.e.* over the whole distributor) can be obtained by putting $x = l$ in the above expression.

∴ Voltage drop over the distributor AB

$$= i\,r\left(l \times l - \frac{l^2}{2}\right)$$

$$= \tfrac{1}{2}\,i\,r\,l^2 = \tfrac{1}{2}\,(i\,l)\,(r\,l)$$

$$= \tfrac{1}{2}\,I\,R$$

where $i\,l = I$, the total current entering at point A

$r\,l = R$, the total resistance of the distributor

Thus, in a uniformly loaded distributor fed at one end, the total voltage drop is equal to that produced by the whole of the load assumed to be concentrated at the middle point.

Example 13.5. *A 2-wire d.c. distributor 200 metres long is uniformly loaded with 2A/metre. Resistance of single wire is 0·3 Ω/km. If the distributor is fed at one end, calculate :*

(*i*) *the voltage drop upto a distance of 150 m from the feeding point*

(*ii*) *the maximum voltage drop*

Solution.

Current loading, $i = 2$ A/m

Resistance of distributor per metre run,

$$r = 2 \times 0{\cdot}3/1000 = 0{\cdot}0006\,\Omega$$

Length of distributor, $l = 200$ m

(*i*) Voltage drop upto a distance x metres from feeding point

$$= i\,r\left(l\,x - \frac{x^2}{2}\right) \qquad \text{[See Art. 13·4]}$$

Here, $x = 150$ m

∴ Desired voltage drop $= 2 \times 0{\cdot}0006\left(200 \times 150 - \dfrac{150 \times 150}{2}\right) = \mathbf{22{\cdot}5\ V}$

(*ii*) Total current entering the distributor,

$$I = i \times l = 2 \times 200 = 400\ \text{A}$$

Total resistance of the distributor,

$$R = r \times l = 0{\cdot}0006 \times 200 = 0{\cdot}12\,\Omega$$

∴ Total drop over the distributor

$$= \frac{1}{2}\,I\,R = \frac{1}{2} \times 400 \times 0{\cdot}12 = \mathbf{24\ V}$$

Example 13.6. *A uniform 2-wire d.c. distributor 500 metres long is loaded with 0.4 ampere/metre and is fed at one end. If the maximum permissible voltage drop is not to exceed 10 V, find the cross-sectional area of the distributor conductor. Take $\rho = 1{\cdot}7 \times 10^{-6}$ Ω cm.*

Solution.

Current entering the distributor, $I = i \times l = 0{\cdot}4 \times 500 = 200$ A

Max. permissible voltage drop $= 10$ V

Let r ohm be the resistance per metre length of the distributor (both wires).

Max. voltage drop $= \frac{1}{2} I R$

or $10 = \frac{1}{2} I r l$ $[\because R = r\,l]$

or $r = \dfrac{2 \times 10}{I \times l} = \dfrac{2 \times 10}{200 \times 500} = 0{\cdot}2 \times 10^{-3}\ \Omega$

∴ Area of cross-section of the distributor conductor is

$$a = \frac{\rho\, l}{r/2} = \frac{1{\cdot}7 \times 10^{-6} \times 100^{*} \times 2}{0{\cdot}2 \times 10^{-3}} = \mathbf{1{\cdot}7\ cm^2}$$

Example 13.7. *A 250 m , 2-wire d.c. distributor fed from one end is loaded uniformly at the rate of 1·6 A/metre. The resistance of each conductor is 0·0002 Ω per metre. Find the voltage necessary at feed point to maintain 250 V (i) at the far end (ii) at the mid-point of the distributor.*

Solution.

Current loading, $i = 1{\cdot}6$A/m

Current entering the distributor, $I = i \times l = 1{\cdot}6 \times 250 = 400$ A

Resistance of the distributor per metre run

$r = 2 \times 0{\cdot}0002 = 0{\cdot}0004\,\Omega$

Total resistance of distributor, $R = r \times l = 0{\cdot}0004 \times 250 = 0{\cdot}1\,\Omega$

(i) Voltage drop over the entire distributor

$$= \frac{1}{2} I R = \frac{1}{2} \times 400 \times 0{\cdot}1 = 20 \text{ V}$$

∴ Voltage at feeding point $= 250 + 20 = \mathbf{270\ V}$

(ii) Voltage drop upto a distance of x metres from feeding point

$$= i\,r\left(l\,x - \frac{x^2}{2}\right)$$

Here $x = l/2 = 250/2 = 125$ m

∴ Voltage drop $= 1{\cdot}6 \times 0{\cdot}0004\left(250 \times 125 - \dfrac{(125)^2}{2}\right) = 15$ V

∴ Voltage at feeding point $= 250 + 15 = \mathbf{265\ V}$

Example 13.8. *Derive an expression for the power loss in a uniformly loaded distributor fed at one end.*

Solution. Fig. 13.13 shows the single line diagram of a 2-wire d.c. distributor AB fed at end A and loaded uniformly with i amperes per metre length.

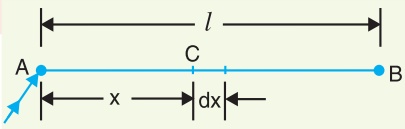

Fig. 13.13

Let l = length of the distributor in metres

r = resistance of distributor (both conductors) per metre run

Consider a small length dx of the distributor at point C at a distance x from the feeding end A. The small length dx will carry current which is tapped in the length CB.

∴ Current in $dx = i\,l - i\,x = i\,(l - x)$

* Because we have assumed that r ohm is the resistance of 1m (= 100 cm) length of the distributor.

$$\text{Power loss in length } dx = (\text{current in length } dx)^2 \times \text{Resistance of length } dx$$
$$= [i\,(l-x)]^2 \times r\,dx$$

Total power loss P in the whole distributor is

$$P = \int_0^l [i\,(l-x)]^2\, r\,dx = \int_0^l i^2\left(l^2 + x^2 - 2\,lx\right) r\,dx$$
$$= i^2 r \int_0^l \left(l^2 + x^2 - 2\,lx\right) dx = i^2 r \left[l^2 x + \frac{x^3}{3} - \frac{2lx^2}{2}\right]_0^l$$
$$= i^2 r \left[l^3 + \frac{l^3}{3} - l^3\right] = i^2 \times \frac{r\,l^3}{3}$$
$$\therefore \quad P = \frac{i^2\,r\,l^3}{3}$$

Example 13.9. *Calculate the voltage at a distance of 200 m of a 300 m long distributor uniformly loaded at the rate of 0.75 A per metre. The distributor is fed at one end at 250 V. The resistance of the distributor (go and return) per metre is 0·00018 Ω. Also find the power loss in the distributor.*

Solution.

Voltage drop at a distance x from supply end

$$= i\,r\left(l\,x - \frac{x^2}{2}\right)$$

Here i = 0·75 A/m; l = 300 m ; x = 200 m ; r = 0·00018 Ω/m

$$\therefore \quad \text{Voltage drop} = 0{\cdot}75 \times 0{\cdot}00018\left[300 \times 200 - \frac{(200)^2}{2}\right] = 5.4 \text{ V}$$

Voltage at a distance of 200 m from supply end

$$= 250 - 5{\cdot}4 = \mathbf{244{\cdot}6\ V}$$

Power loss in the distributor is

$$P = \frac{i^2\,r\,l^3}{3} = \frac{(0\cdot75)^2 \times 0\cdot00018 \times (300)^3}{3} = \mathbf{911{\cdot}25\ W}$$

TUTORIAL PROBLEMS

1. A 2-wire d.c. distributor 500 m long is loaded uniformly at the rate of 0·4A/m. If the voltage drop in the distributor is not to exceed 5V, calculate the area of X-section of each conductor required when the distributor is fed at one end. Take resistivity of conductor material as $1{\cdot}7 \times 10^{-8}$ Ωm. **[3·4 cm²]**
2. A uniformly distributed load on a distributor of length 500 m is rated at 1 A per metre length. The distributor is fed from one end at 220V. Determine the voltage drop at a distance of 400 m from the feeding point. Assume a loop resistance of 2×10^{-5} Ω per metre. **[2·4 V]**
3. A 250 m, 2-wire d.c. distributor fed from one end is loaded uniformly at the rate of 0·8 A per metre. The resistance of each conductor is 0·0002 Ω per metre. Find the necessary voltage at the feeding point to maintain 250 V at the far end of the distributor. **[260 V]**

13.5 Distributor Fed at Both Ends — Concentrated Loading

Whenever possible, it is desirable that a long distributor should be fed at both ends instead of at one end only, since total voltage drop can be considerably reduced without increasing the cross-section of the conductor. The two ends of the distributor may be supplied with ***(i)*** equal voltages ***(ii)*** unequal voltages.

(*i*) Two ends fed with equal voltages. Consider a distributor *A B* fed at both ends with equal voltages *V* volts and having concentrated loads I_1, I_2, I_3, I_4 and I_5 at points *C*, *D*, *E*, *F* and *G* respectively as shown in Fig. 13.14. As we move away from one of the feeding points, *say A*, p.d. goes on decreasing till it reaches the minimum value at some load point, *say E*, and then again starts rising and becomes *V* volts as we reach the other feeding point *B*.

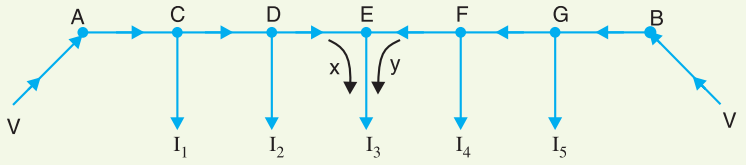

Fig. 13.14

All the currents tapped off between points *A* and *E* (minimum p.d. point) will be supplied from the feeding point *A* while those tapped off between *B* and *E* will be supplied from the feeding point *B*. The current tapped off at point *E* itself will be partly supplied from *A* and partly from *B*. If these currents are *x* and *y* respectively, then,

$$I_3 = x + y$$

Therefore, we arrive at a very important conclusion that at the point of minimum potential, current comes from both ends of the distributor.

Point of minimum potential. It is generally desired to locate the point of minimum potential. There is a simple method for it. Consider a distributor *A B* having three concentrated loads I_1, I_2 and I_3 at points *C*, *D* and *E* respectively. Suppose that current supplied by feeding end *A* is I_A. Then current distribution in the various sections of the distributor can be worked out as shown in Fig. 13.15 (*i*). Thus

$$I_{AC} = I_A\,; \qquad I_{CD} = I_A - I_1$$

$$I_{DE} = I_A - I_1 - I_2\,; \qquad I_{EB} = I_A - I_1 - I_2 - I_3$$

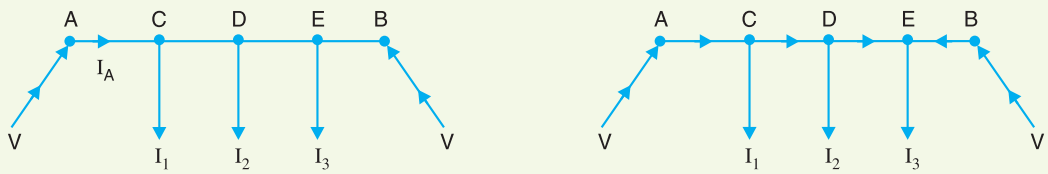

Fig. 13.15

Voltage drop between *A* and *B* = Voltage drop over *A B*

or $$V - V = I_A R_{AC} + (I_A - I_1) R_{CD} + (I_A - I_1 - I_2) R_{DE} + (I_A - I_1 - I_2 - I_3) R_{EB}$$

From this equation, the unknown I_A can be calculated as the values of other quantities are generally given. Suppose *actual* directions of currents in the various sections of the distributor are indicated as shown in Fig. 13.15 (*ii*). The load point where the currents are coming from both sides of the distributor is the point of minimum potential *i.e.* point *E* in this case

(*ii*) Two ends fed with unequal voltages. Fig. 13.16 shows the distributor *A B* fed with unequal voltages ; end *A* being fed at V_1 volts and end *B* at V_2 volts. The point of minimum potential can be found by following the same procedure as discussed above. Thus in this case,

Voltage drop between *A* and *B* = Voltage drop over *A B*

or $$V_1 - V_2 = \text{Voltage drop over } A\,B$$

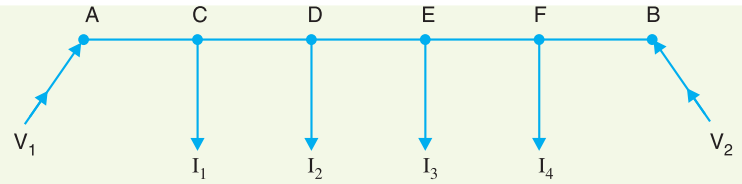

Fig. 13.16

Example 13.10. *A 2-wire d.c. street mains AB, 600 m long is fed from both ends at 220 V. Loads of 20 A, 40 A, 50 A and 30 A are tapped at distances of 100m, 250m, 400m and 500 m from the end A respectively. If the area of X-section of distributor conductor is 1cm^2, find the minimum consumer voltage. Take* $\rho = 1{\cdot}7 \times 10^{-6}\ \Omega$ *cm.*

Solution. Fig. 13.17 shows the distributor with its tapped currents. Let I_A amperes be the current supplied from the feeding end A. Then currents in the various sections of the distributor are as shown in Fig. 13.17.

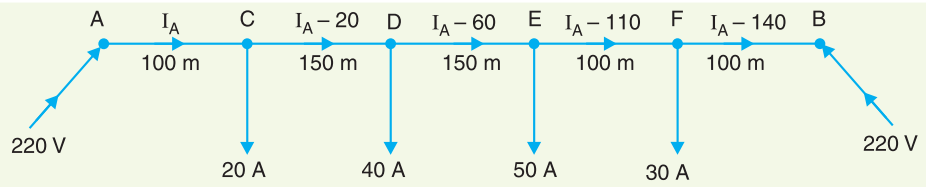

Fig. 13.17

Resistance of 1 m length of distributor

$$= 2 \times \frac{1{\cdot}7 \times 10^{-6} \times 100}{1} = 3{\cdot}4 \times 10^{-4}\ \Omega$$

Resistance of section AC, R_{AC} $= (3{\cdot}4 \times 10^{-4}) \times 100 = 0{\cdot}034\ \Omega$

Resistance of section CD, R_{CD} $= (3{\cdot}4 \times 10^{-4}) \times 150 = 0{\cdot}051\ \Omega$

Resistance of section DE, R_{DE} $= (3{\cdot}4 \times 10^{-4}) \times 150 = 0{\cdot}051\ \Omega$

Resistance of section EF, R_{EF} $= (3{\cdot}4 \times 10^{-4}) \times 100 = 0{\cdot}034\ \Omega$

Resistance of section FB, R_{FB} $= (3{\cdot}4 \times 10^{-4}) \times 100 = 0{\cdot}034\ \Omega$

Voltage at B = Voltage at A – Drop over length AB

or $$V_B = V_A - [I_A R_{AC} + (I_A - 20) R_{CD} + (I_A - 60) R_{DE} + (I_A - 110) R_{EF} + (I_A - 140) R_{FB}]$$

or $$220 = 220 - [0{\cdot}034 I_A + 0{\cdot}051 (I_A - 20) + 0{\cdot}051 (I_A - 60) + 0{\cdot}034 (I_A - 110) + 0{\cdot}034 (I_A - 140)]$$

$$= 220 - [0{\cdot}204 I_A - 12{\cdot}58]$$

or $$0{\cdot}204 I_A = 12{\cdot}58$$

$\therefore$ $$I_A = 12{\cdot}58/0{\cdot}204 = 61{\cdot}7 \text{ A}$$

The *actual distribution of currents in the various sections of the distributor is shown in Fig. 13.18. It is clear that currents are coming to load point E from both sides *i.e.* from point D and point F. Hence, E is the point of minimum potential.

$\therefore$ Minimum consumer voltage,

$$V_E = V_A - [I_{AC} R_{AC} + I_{CD} R_{CD} + I_{DE} R_{DE}]$$

* Knowing the value of I_A, current in any section can be determined. Thus,

Current in section CD, I_{CD} $= I_A - 20 = 61{\cdot}7 - 20 = 41{\cdot}7\ A$ from C to D

Current in section EF, I_{EF} $= I_A - 110 = 61{\cdot}7 - 110 = -48{\cdot}3$ A from E to F

$= 48{\cdot}3$ A from F to E

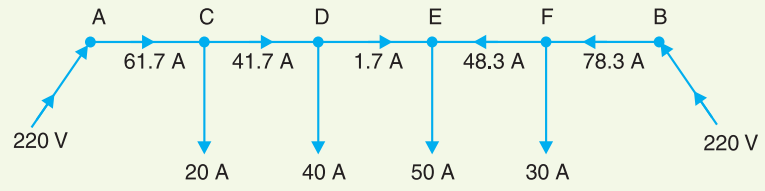

Fig. 13.18

$$= 220 - [61{\cdot}7 \times 0{\cdot}034 + 41{\cdot}7 \times 0{\cdot}051 + 1{\cdot}7 \times 0{\cdot}051]$$

$$= 220 - 4{\cdot}31 = \mathbf{215{\cdot}69\ V}$$

Example 13.11. *A 2-wire d.c. distributor AB is fed from both ends. At feeding point A, the voltage is maintained as at 230 V and at B 235 V. The total length of the distributor is 200 metres and loads are tapped off as under :*

25 A at 50 metres from A ; 50 A at 75 metres from A

30 A at 100 metres from A ; 40 A at 150 metres from A

The resistance per kilometre of one conductor is 0·3 Ω. Calculate :

(*i*) *currents in various sections of the distributor*

(*ii*) *minimum voltage and the point at which it occurs*

Solution. Fig. 13.19 shows the distributor with its tapped currents. Let I_A amperes be the current supplied from the feeding point A. Then currents in the various sections of the distributor are as shown in Fig 13.19.

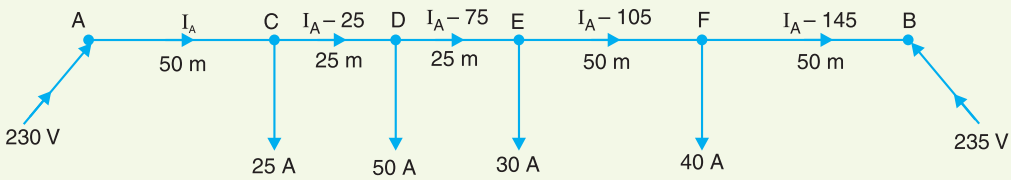

Fig. 13.19

Resistance of 1000 m length of distributor (both wires)

$$= 2 \times 0{\cdot}3 = 0{\cdot}6\,\Omega$$

Resistance of section AC, R_{AC} $= 0{\cdot}6 \times 50/1000 = 0{\cdot}03\,\Omega$

Resistance of section CD, R_{CD} $= 0{\cdot}6 \times 25/1000 = 0{\cdot}015\,\Omega$

Resistance of section DE, R_{DE} $= 0{\cdot}6 \times 25/1000 = 0{\cdot}015\,\Omega$

Resistance of section EF, R_{EF} $= 0{\cdot}6 \times 50/1000 = 0{\cdot}03\,\Omega$

Resistance of section FB, R_{FB} $= 0{\cdot}6 \times 50/1000 = 0{\cdot}03\,\Omega$

Voltage at B = Voltage at A – Drop over AB

or $$V_B = V_A - [I_A R_{AC} + (I_A - 25) R_{CD} + (I_A - 75) R_{DE} + (I_A - 105) R_{EF} + (I_A - 145) R_{FB}]$$

or $$235 = 230 - [0{\cdot}03 I_A + 0{\cdot}015 (I_A - 25) + 0{\cdot}015 (I_A - 75) + 0{\cdot}03 (I_A - 105) + 0{\cdot}03 (I_A - 145)]$$

or $$235 = 230 - [0{\cdot}12 I_A - 9]$$

$$\therefore \quad I_A = \frac{239 - 235}{0{\cdot}12} = 33{\cdot}34\ \text{A}$$

(*i*) $\therefore$ Current in section AC, I_{AC} $= I_A = \mathbf{33{\cdot}34\ A}$

Current in section CD, I_{CD} $= I_A - 25 = 33{\cdot}34 - 25 = \mathbf{8{\cdot}34\ A}$

Current in section DE, I_{DE} = $I_A - 75 = 33{\cdot}34 - 75 = -41{\cdot}66$ A *from D to E*

= **41·66 A** *from E to D*

Current in section EF, I_{EF} = $I_A - 105 = 33{\cdot}34 - 105 = -71{\cdot}66$ A *from E to F*

= **71·66 A** *from F to E*

Current in section FB, I_{FB} = $I_A - 145 = 33{\cdot}34 - 145 = -111{\cdot}66$ A *from F to B*

= **111·66 A** *from B to F*

(ii) The actual distribution of currents in the various sections of the distributor is shown in Fig. 13.20. The currents are coming to load point D from both sides of the distributor. Therefore, load point D is the point of minimum potential.

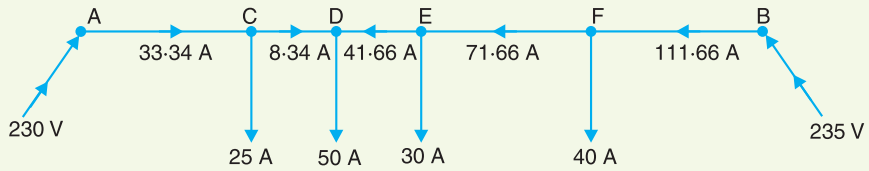

Fig. 13.20

Voltage at D, V_D = $V_A - [I_{AC} R_{AC} + I_{CD} R_{CD}]$

= $230 - [33{\cdot}34 \times 0{\cdot}03 + 8{\cdot}34 \times 0{\cdot}015]$

= $230 - 1{\cdot}125 =$ **228·875 V**

Example 13.12. *A two-wire d.c. distributor AB, 600 metres long is loaded as under :*

Distance from A (metres) :	*150*	*300*	*350*	*450*
Loads in Amperes :	*100*	*200*	*250*	*300*

The feeding point A is maintained at 440 V and that of B at 430 V. If each conductor has a resistance of 0·01 Ω per 100 metres, calculate :

(*i*) *the currents supplied from A to B,* (*ii*) *the power dissipated in the distributor.*

Solution. Fig. 13.21 shows the distributor with its tapped currents. Let I_A amperes be the current supplied from the feeding point A. Then currents in the various sections of the distributor are as shown in Fig.13.21.

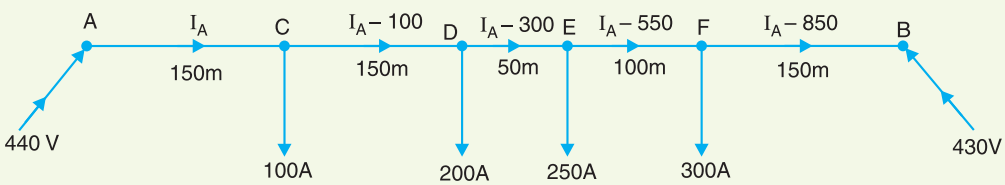

Fig. 13.21

Resistance of 100 m length of distributor (both wires)

= $2 \times 0{\cdot}01 = 0{\cdot}02\,\Omega$

Resistance of section AC, R_{AC} = $0{\cdot}02 \times 150/100 = 0{\cdot}03\,\Omega$

Resistance of section CD, R_{CD} = $0{\cdot}02 \times 150/100 = 0{\cdot}03\,\Omega$

Resistance of section DE, R_{DE} = $0{\cdot}02 \times 50/100 = 0{\cdot}01\,\Omega$

Resistance of section EF, R_{EF} = $0{\cdot}02 \times 100/100 = 0{\cdot}02\,\Omega$

Resistance of section FB, R_{FB} = $0{\cdot}02 \times 150/100 = 0{\cdot}03\,\Omega$

Voltage at B = Voltage at A — Drop over AB

or $V_B = V_A - [I_A R_{AC} + (I_A - 100) R_{CD} + (I_A - 300) R_{DE} + (I_A - 550) R_{EF} + (I_A - 850) R_{FB}]$

or $$430 = 440 - [0{\cdot}03 I_A + 0{\cdot}03 (I_A - 100) + 0{\cdot}01 (I_A - 300) + 0{\cdot}02 (I_A - 550) + 0{\cdot}03 (I_A - 850)]$$

or $$430 = 440 - [0{\cdot}12 I_A - 42{\cdot}5]$$

$\therefore$ $$I_A = \frac{482{\cdot}5 - 430}{0{\cdot}12} = 437{\cdot}5 \text{ A}$$

The actual distribution of currents in the various sections of the distributor is shown in Fig.13.22. Incidentally, E is the point of minimum potential.

(i) Referring to Fig. 13.22, it is clear that

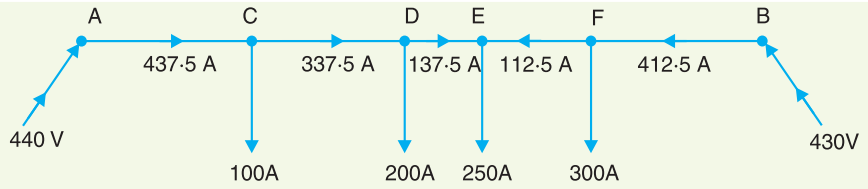

Fig. 13.22

Current supplied from end A, I_A = **437·5 A**

Current supplied from end B, I_B = **412·5 A**

(ii) Power loss in the distributor

$$= I_{AC}^2 R_{AC} + I_{CD}^2 R_{CD} + I_{DE}^2 R_{DE} + I_{EF}^2 R_{EF} + I^2_{FB} R_{FB}$$

$$= (437{\cdot}5)^2 \times 0{\cdot}03 + (337{\cdot}5)^2 \times 0{\cdot}03 + (137{\cdot}5)^2 \times 0{\cdot}01 + (112{\cdot}5)^2 \times 0{\cdot}02 + (412{\cdot}5)^2 \times 0{\cdot}03$$

$$= 5742 + 3417 + 189 + 253 + 5104 = 14{,}705 \text{ watts} = \mathbf{14{\cdot}705\ kW}$$

Example 13.13. *An electric train runs between two sub-stations 6 km apart maintained at voltages 600 V and 590 V respectively and draws a constant current of 300 A while in motion. The track resistance of go and return path is 0·04 Ω/km. Calculate :*

(*i*) *the point along the track where minimum potential occurs*

(*ii*) *the current supplied by the two sub-stations when the train is at the point of minimum potential*

Solution. The single line diagram is shown in Fig. 13.23 where substation A is at 600 V and sub-station B at 590 V. Suppose that minimum potential occurs at point M at a distance x km from the substation A. Let I_A amperes be the current supplied by the sub-station A. Then current supplied by sub-station B is 300 — I_A as shown in Fig 13.23.

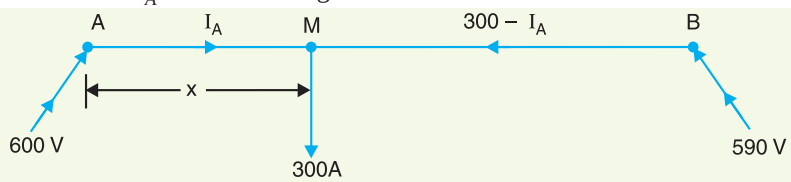

Fig. 13.23

Resistance of track (go and return path) per km

$$= 0{\cdot}04\ \Omega$$

Track resistance for section AM, $R_{AM} = 0{\cdot}04\, x\ \Omega$

Track resistance for section MB, $R_{MB} = 0{\cdot}04\,(6 - x)\Omega$

Potential at M, $V_M = V_A - I_A R_{AM}$ ... (*i*)

Also, Potential at M, $V_M = V_B - (300 - I_A) R_{MB}$ ... (*ii*)

From equations (*i*) and (*ii*), we get,

$$V_A - I_A R_{AM} = V_B - (300 - I_A) R_{MB}$$

or $$600 - 0{\cdot}04 x I_A = 590 - (300 - I_A) \times 0{\cdot}04 (6 - x)$$

or $$600 - 0{\cdot}04 x I_A = 590 - 0{\cdot}04 (1800 - 300 x - 6 I_A + I_A \times x)$$

or $$600 - 0{\cdot}04 x I_A = 590 - 72 + 12 x + 0{\cdot}24 I_A - 0{\cdot}04 x I_A$$

or $$0{\cdot}24 I_A = 82 - 12 x$$

or $$I_A = 341{\cdot}7 - 50 x$$

Substituting the value of I_A in eq. (*i*), we get,

$$V_M = V_A - (341{\cdot}7 - 50 x) \times 0{\cdot}04 x$$

$\therefore$ $$V_M = 600 - 13{\cdot}7 x + 2x^2 \qquad ...(iii)$$

(*i*) For V_M to be minimum, its differential coefficient *w.r.t.* x must be zero *i.e.*

$$\frac{d}{dx}(600 - 13{\cdot}7 x + 2x^2) = 0$$

or $$0 - 13{\cdot}7 + 4x = 0$$

$\therefore$ $$x = 13{\cdot}7/4 = \mathbf{3{\cdot}425\ km}$$

i.e. minimum potential occurs at a distance of 3·425 km from the sub-station A.

(*ii*) $\therefore$ Current supplied by sub-station A

$$= 341{\cdot}7 - 50 \times 3{\cdot}425 = 341{\cdot}7 - 171{\cdot}25 = \mathbf{170{\cdot}45\ A}$$

Current supplied by sub-station B $= 300 - I_A = 300 - 170{\cdot}45 = \mathbf{129{\cdot}55\ A}$

TUTORIAL PROBLEMS

1. A 2-wire d.c. distributor AB is fed at both ends at the same voltage of 230 V. The length of the distributor is 500 metres and the loads are tapped off from the end A as shown below :

Load :	100 A	60 A	40 A	100 A
Distance :	50 m	150 m	250 m	400 m

If the maximum voltage drop of 5·5 V is to be allowed, find the X-sectional area of each conductor and point of minimum potential. Specific resistance of conductor material may be taken as $1{\cdot}73 \times 10^{-8}\ \Omega$ m. **[1·06 cm^2 ; 250 m from A]**

2. A d.c. distributor AB is fed at both ends. At feeding point A, the voltage is maintained at 235 V and at B at 236 V. The total length of the distributor is 200 metres and loads are tapped off as under :

20 A at 50 m from A
40 A at 75 m from A
25 A at 100 m from A
30 A at 150 m from A

The resistance per kilometre of one conductor is 0·4 Ω. Calculate the minimum voltage and the point at which it occurs. **[232·175 V ; 75 m from point A]**

3. A two conductor main AB, 500 m in length is fed from both ends at 250 volts. Loads of 50 A, 60 A, 40 A and 30 A are tapped at distance of 100 m, 250 m, 350 m and 400 m from end A respectively. If the X-section of conductor be 1 cm^2 and specific resistance of the material of the conductor is 1·7 μ Ω cm, determine the minimum consumer voltage. **[245·07 V]**

13.6 Uniformly Loaded Distributor Fed at Both Ends

We shall now determine the voltage drop in a uniformly loaded distributor fed at both ends. There can be two cases *viz.* the distributor fed at both ends with (*i*) equal voltages (*ii*) unequal voltages. The two cases shall be discussed separately.

(*i*) Distributor fed at both ends with equal voltages. Consider a distributor AB of length l metres, having resistance r ohms per metre run and with uniform loading of i amperes per

metre run as shown in Fig. 13.24. Let the distributor be fed at the feeding points A and B at equal voltages, say V volts. The total current supplied to the distributor is $i\,l$. As the two end voltages are equal, therefore, current supplied from each feeding point is $i\,l/2$ *i.e.*

Current supplied from each feeding point

$$= \frac{i\,l}{2}$$

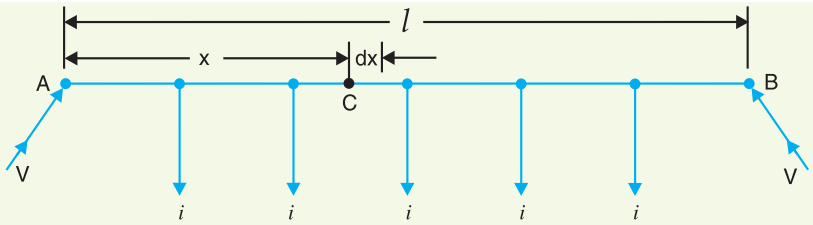

Fig. 13.24

Consider a point C at a distance x metres from the feeding point A. Then current at point C is

$$= \frac{i\,l}{2} - i\,x = i\left(\frac{l}{2} - x\right)$$

Now, consider a small length dx near point C. Its resistance is $r\,dx$ and the voltage drop over length dx is

$$dv = i\left(\frac{l}{2} - x\right) r\,dx = i\,r\left(\frac{l}{2} - x\right) dx$$

$$\therefore \quad \text{Voltage drop upto point } C = \int_0^x i\,r\left(\frac{l}{2} - x\right) dx = i\,r\left(\frac{l\,x}{2} - \frac{x^2}{2}\right)$$

$$= \frac{i\,r}{2}\left(l\,x - x^2\right)$$

Obviously, the point of minimum potential will be the mid-point. Therefore, maximum voltage drop will occur at mid-point *i.e.* where $x = l/2$.

$$\therefore \quad \text{Max. voltage drop} = \frac{i\,r}{2}\left(l\,x - x^2\right)$$

$$= \frac{i\,r}{2}\left(l \times \frac{l}{2} - \frac{l^2}{4}\right) \qquad [\text{Putting } x = l/2]$$

$$= \frac{1}{8}\,i\,r\,l^2 = \frac{1}{8}(i\,l)(r\,l) = \frac{1}{8}\,I\,R$$

where $i\,l = I$, the total current fed to the distributor from both ends

$r\,l = R$, the total resistance of the distributor

$$\text{Minimum voltage} = V - \frac{I\,R}{8} \text{ volts}$$

(ii) **Distributor fed at both ends with unequal voltages.** Consider a distributor AB of length l metres having resistance r ohms per metre run and with a uniform loading of i amperes per metre run as shown in Fig. 13.25. Let the distributor be fed from feeding points A and B at voltages V_A and V_B respectively.

Suppose that the point of minimum potential C is situated at a distance x metres from the feeding point A. Then current supplied by the feeding point A will be *$i\,x$.

* As C is at minimum potential, therefore, there is no current at this point. Consequently, current in section AC (*i.e.* $i\,x$) will be the current supplied by feeding point A.

$\therefore$ Voltage drop in section AC $= \dfrac{i\,r\,x^2}{2}$ volts

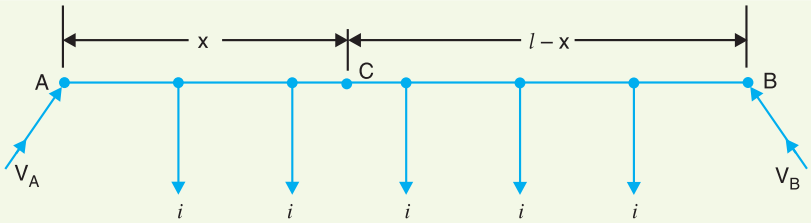

Fig. 13.25

As the distance of C from feeding point B is $(l - x)$, therefore, current fed from B is $i\,(l - x)$.

$\therefore$ Voltage drop in section BC $= \dfrac{i\,r\,(l-x)^2}{2}$ volts

Voltage at point C, V_C $= V_A -$ Drop over AC

$$= V_A - \frac{i\,r\,x^2}{2} \qquad ...(i)$$

Also, voltage at point C, V_C $= V_B -$ Drop over BC

$$= V_B - \frac{i\,r\,(l-x)^2}{2} \qquad ...(ii)$$

From equations (i) and (ii), we get,

$$V_A - \frac{i\,r\,x^2}{2} = V_B - \frac{i\,r\,(l-x)^2}{2}$$

Solving the equation for x, we get,

$$x = \frac{V_A - V_B}{i\,r\,l} + \frac{l}{2}$$

As all the quantities on the right hand side of the equation are known, therefore, the point on the distributor where minimum potential occurs can be calculated.

Example 13.14. *A two-wire d.c. distributor cable 1000 metres long is loaded with 0·5 A/metre. Resistance of each conductor is 0·05 Ω/km. Calculate the maximum voltage drop if the distributor is fed from both ends with equal voltages of 220 V. What is the minimum voltage and where it occurs ?*

Solution.

Current loading, $i = 0{\cdot}5$ A/m

Resistance of distributor/m, $r = 2 \times 0{\cdot}05/1000 = 0{\cdot}1 \times 10^{-3}\ \Omega$

Length of distributor, $l = 1000$ m

Total current supplied by distributor, $I = i\,l = 0{\cdot}5 \times 1000 = 500$ A

Total resistance of the distributor, $R = r\,l = 0{\cdot}1 \times 10^{-3} \times 1000 = 0{\cdot}1\ \Omega$

$\therefore$ Max. voltage drop $= \dfrac{I\,R}{8} = \dfrac{500 \times 0{\cdot}1}{8} =$ **6·25 V**

Minimum voltage will occur at the mid-point of the distributor and its value is

$= 220 - 6{\cdot}25 =$ **213·75 V**

Example 13.15. *A 2-wire d.c. distributor AB 500 metres long is fed from both ends and is loaded uniformly at the rate of 1·0 A/metre. At feeding point A, the voltage is maintained at 255 V and at B at 250 V. If the resistance of each conductor is 0·1 Ω per kilometre, determine :*

(i) the minimum voltage and the point where it occurs

(ii) the currents supplied from feeding points A and B

Solution. Fig. 13.26 shows the single line diagram of the distributor.

Voltage at feeding point A, $V_A = 255$ V

Voltage at feeding point B, $V_B = 250$ V

Length of distributor, $l = 500$ m

Current loading, $i = 1$ A/m

Resistance of distributor/m, $r = 2 \times 0{\cdot}1/1000 = 0{\cdot}0002\,\Omega$

(*i*) Let the minimum potential occur at a point C distant x metres from the feeding point A. As proved in Art. 13.6,

$$x = \frac{V_A - V_B}{i\,r\,l} + \frac{l}{2} = \frac{255 - 250}{1 \times 0{\cdot}0002 \times 500} + 500/2$$

$$= 50 + 250 = \mathbf{300\ m}$$

i.e. minimum potential occurs at 300 m from point A.

Minimum voltage, $$V_C = V_A - \frac{ir\,x^2}{2} = 255 - \frac{1 \times 0{\cdot}0002 \times (300)^2}{2}$$

$$= 255 - 9 = \mathbf{246\ V}$$

(*ii*) Current supplied from A $= i\,x = 1 \times 300 = \mathbf{300\ A}$

Current supplied from B $= i\,(l - x) = 1\,(500 - 300) = \mathbf{200\ A}$

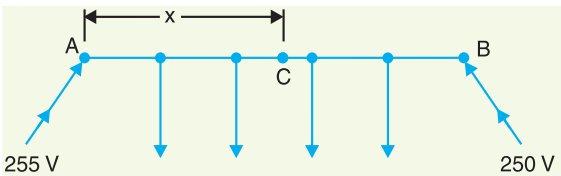

Fig. 13.26

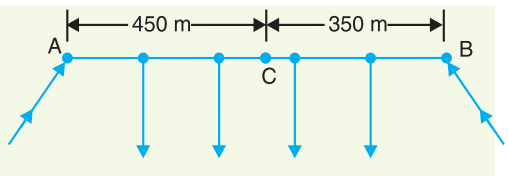

Fig. 13.27

Example 13.16. *A 800 metres 2-wire d.c. distributor AB fed from both ends is uniformly loaded at the rate of 1·25 A/metre run. Calculate the voltage at the feeding points A and B if the minimum potential of 220 V occurs at point C at a distance of 450 metres from the end A. Resistance of each conductor is 0·05 Ω/km.*

Solution. Fig. 13.27 shows the single line diagram of the distributor.

Current loading, $i = 1{\cdot}25$ A/m

Resistance of distributor/m, $r = 2 \times 0{\cdot}05/1000 = 0{\cdot}0001\,\Omega$

Voltage at C, $V_C = 220$ V

Length of distributor, $l = 800$ m

Distance of point C from A, $x = 450$ m

Voltage drop in section AC $$= \frac{i\,r\,x^2}{2} = \frac{1{\cdot}25 \times 0{\cdot}0001 \times (450)^2}{2} = 12{\cdot}65 \text{ V}$$

$\therefore$ Voltage at feeding point A, $V_A = 220 + 12{\cdot}65 = \mathbf{232{\cdot}65\ V}$

Voltage drop in section BC $$= \frac{i\,r\,(l - x)^2}{2} = \frac{1{\cdot}25 \times 0{\cdot}0001 \times (800 - 450)^2}{2}$$

$$= 7{\cdot}65 \text{ V}$$

$\therefore$ Voltage at feeding point B, $V_B = 220 + 7{\cdot}65 = \mathbf{227{\cdot}65\ V}$

Example 13.17.

(*i*) *A uniformly loaded distributor is fed at the centre. Show that maximum voltage drop = I R/8 where I is the total current fed to the distributor and R is the total resistance of the distributor.*

(*ii*) *A 2-wire d.c. distributor 1000 metres long is fed at the centre and is loaded uniformly at the rate of 1·25 A/metre. If the resistance of each conductor is 0·05 Ω/km, find the maximum voltage drop in the distributor.*

Solution. (*i*) Fig. 13.28 shows distributor *AB* fed at centre *C* and uniformly loaded with *i* amperes/metre. Let *l* metres be the length of the distributor and *r* ohms be the resistance per metre run. Obviously, maximum voltage drop will occur at either end.

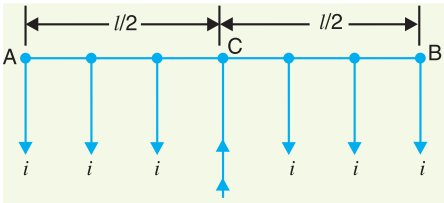

Fig. 13.28

∴ Max. voltage drop = Voltage drop in half distributor

$$= \frac{1}{2}\left(\frac{i\,l}{2}\right)\left(\frac{r\,l}{2}\right) = \frac{1}{8}(i\,l)(r\,l)$$

$$= \frac{1}{8} I R$$

where $i\,l$ = I, the total current fed to the distributor

$r\,l$ = R, the total resistance of the distributor

(*ii*) Total current fed to the distributor is

$$I = i\,l = 1{\cdot}25 \times 1000 = 1250 \text{ A}$$

Total resistance of the distributor is

$$R = r\,l = 2 \times 0{\cdot}05 \times 1 = 0{\cdot}1\ \Omega$$

$$\text{Max. voltage drop} = \frac{1}{8} I R = \frac{1}{8} \times 1250 \times 0{\cdot}1 = \mathbf{15.62\ V}$$

Example 13.18. *Derive an expression for the power loss in a uniformly loaded distributor fed at both ends with equal voltages.*

Solution. Consider a distributor *AB* of length *l* metres, having resistance *r* ohms per metre run with uniform loading of *i* amperes per metre run as shown in Fig.13.29. Let the distributor be fed at the feeding points *A* and *B* at equal voltages, say V volts. The total current supplied by the distributor is *i l*. As the two end voltages are equal, therefore, current supplied from each feeding point is *i l*/2.

Current supplied from each feeding point = $\frac{i\,l}{2}$

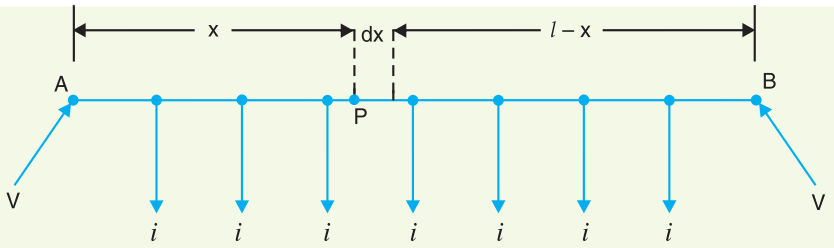

Fig. 13.29

Consider a small length *dx* of the distributor at point *P* which is at a distance *x* from the feeding end *A*.

Resistance of length *dx* = *r dx*

$$\text{Current in length } dx = \frac{i\,l}{2} - i\,x = i\left(\frac{l}{2} - x\right)$$

$$\text{Power loss in length } dx = (\text{current in } dx)^2 \times \text{Resistance of } dx$$

$$= \left[i\left(\frac{l}{2} - x\right)\right]^2 \times r\,dx$$

Total power loss in the distributor is

$$P = \int_0^l \left[i\left(\frac{l}{2} - x\right)\right]^2 r\,dx = i^2 r \int_0^l \left(\frac{l^2}{4} - l\,x + x^2\right) dx$$

$$= i^2 r\left[\frac{l^2 x}{4} - \frac{l\,x^2}{2} + \frac{x^3}{3}\right]_0^l = i^2 r\left[\frac{l^3}{4} - \frac{l^3}{2} + \frac{l^3}{3}\right]$$

$$\therefore \quad P = \frac{i^2\,r\,l^3}{12}$$

13.7 Distributor with Both Concentrated and Uniform Loading

There are several problems where a distributor has both concentrated and uniform loadings. In such situations, the total drop over any section of the distributor is equal to the sum of drops due to concentrated and uniform loading in that section. We shall solve a few problems by way of illustration.

Example 13.19. *A 2-wire d.c. distributor AB, 900 metres long is fed at A at 400 V and loads of 50 A, 100 A and 150 A are tapped off from C, D and E which are at a distance of 200 m, 500 m and 800 m from point A respectively. The distributor is also loaded uniformly at the rate of 0.5 A/m. If the resistance of distributor per metre (go and return) is 0.0001 Ω, calculate voltage (i) at point B and (ii) at point D.*

Solution. This problem can be solved in two stages. First, the drop at any point due to concentrated loading is found. To this is added the voltage drop due to uniform loading.

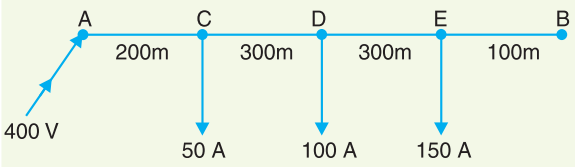

Fig. 13.30

Drops due to concentrated loads. Fig. 13.30 shows only the concentrated loads tapped off from the various points. The currents in the various sections are :

$$I_{AC} = 300 \text{ A} ; I_{CD} = 250 \text{ A} ; I_{DE} = 150 \text{ A}$$

$$\text{Drop in section } AC = I_{AC}\,R_{AC} = 300 \times (200 \times 0{\cdot}0001) = 6 \text{ V}$$

$$\text{Drop in section } CD = 250 \times (300 \times 0{\cdot}0001) = 7{\cdot}5 \text{ V}$$

$$\text{Drop in section } DE = 150 \times (300 \times 0{\cdot}0001) = 4{\cdot}5 \text{ V}$$

$$\text{Total drop over } AB = 6 + 7{\cdot}5 + 4{\cdot}5 = 18 \text{ V}$$

Drops due to uniform loading

$$\text{Drop over } AB = \frac{i\,r\,l^2}{2} = \frac{0{\cdot}5 \times 0{\cdot}0001 \times (900)^2}{2} = 20{\cdot}25 \text{ V}$$

$$\text{Drop over } AD = i\,r\left(l\,x - \frac{x^2}{2}\right)$$

Here, $l = 900$ m ; $x = 500$ m

$$\therefore \quad \text{Drop over } AD = 0{\cdot}5 \times 0{\cdot}0001\left(900 \times 500 - \frac{500^2}{2}\right) = 16{\cdot}25 \text{ V}$$

(*i*) Voltage at point B = V_A – Drop over AB due to conc. and uniform loadings

= 400 – (18 + 20·25) = **361·75 V**

(*ii*) Voltage at point D = V_A – Drop over AD due to conc. and uniform loadings

= 400 – (6 + 7·5 + 16·25) = **370·25 V**

Example 13.20. *Two conductors of a d.c. distributor cable AB 1000 m long have a total resistance of 0·1 Ω. The ends A and B are fed at 240 V. The cable is uniformly loaded at 0·5 A per metre length and has concentrated loads of 120 A, 60 A, 100 A and 40 A at points distant 200 m, 400 m, 700 m and 900 m respectively from the end A. Calculate (i) the point of minimum potential (ii) currents supplied from ends A and B (iii) the value of minimum potential.*

Solution.

Distributor resistance per metre length, $r = 0{\cdot}1/1000 = 10^{-4}\ \Omega$

Uniform current loading, $i = 0{\cdot}5$ A/m

(*i*) Point of minimum potential. The point of minimum potential is not affected by the uniform loading of the distributor. Therefore, let us consider the concentrated loads first as shown in Fig. 13.31. Suppose the current supplied by end A is I. Then currents in the various sections will be as shown in Fig. 13.31.

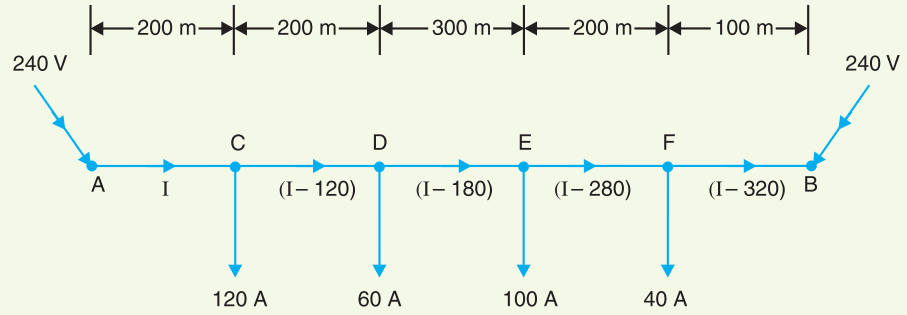

Fig. 13.31

$V_A - V_B$ = Drop over the distributor AB

$240 - 240 = I_{AC} R_{AC} + I_{CD} R_{CD} + I_{DE} R_{DE} + I_{EF} R_{EF} + I_{FB} R_{FB}$

or $0 = 10^{-4} [I \times 200 + (I - 120)\ 200 + (I - 180)\ 300 + (I - 280)\ 200 + (I - 320) \times 100]$

or $0 = 1000\ I - 166000 \quad \therefore \quad I = 166000/1000 = 166$ A

The actual distribution of currents in the various sections of the distributor due to concentrated loading is shown in Fig. 13.32. It is clear from this figure that *D is the point of minimum potential.*

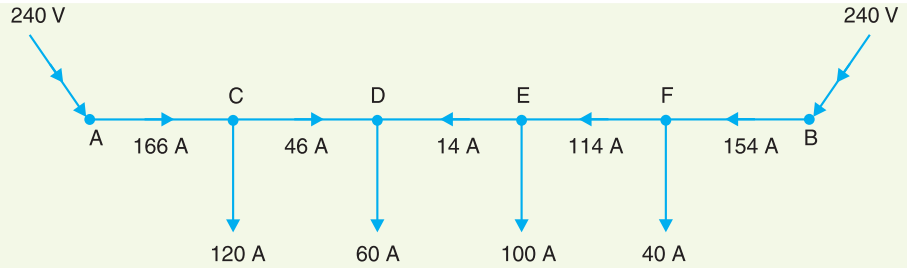

Fig. 13.32

(*ii*) The feeding point A will supply 166 A due to concentrated loading *plus* 0·5 × 400 = 200 A due to uniform loading.

∴ Current supplied by A, I_A = 166 + 200 = **366 A**

The feeding point B will supply a current of 154 A due to concentrated loading *plus* 0·5 × 600 = 300 A due to uniform loading.

∴ Current supplied by B, I_B = 154 + 300 = **454 A**

(iii) As stated above, D is the point of minimum potential.

∴ Minimum potential, V_D = V_A – Drop in AD due to conc. loading – Drop in AD due to uniform loading

Now, Drop in AD due to conc. loading $= I_{AC} R_{AC} + I_{CD} R_{CD}$

$= 166 \times 10^{-4} \times 200 + 46 \times 10^{-4} \times 200$

$= 3{\cdot}32 + 0{\cdot}92 = 4{\cdot}24$ V

Drop in AD due to uniform loading $= \dfrac{i\,r^{*}\,l^2}{2} = \dfrac{0{\cdot}5 \times 10^{-4} \times (400)^2}{2} = 4\,V$

∴ $V_D = 240 - 4{\cdot}24 - 4$ = **231·76 V**

Example 13.21. *A d.c. 2-wire distributor AB is 500m long and is fed at both ends at 240 V. The distributor is loaded as shown in Fig 13.33. The resistance of the distributor (go and return) is 0·001Ω per metre. Calculate (i) the point of minimum voltage and (ii) the value of this voltage.*

Solution. Let D be the point of **minimum potential and let x be the current flowing in section CD as shown in Fig 13.33. Then current supplied by end B will be $(60 - x)$.

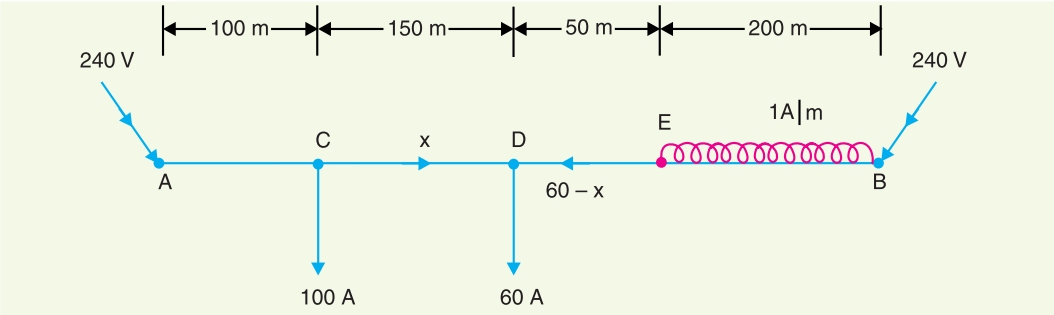

Fig. 13.33

(i) If r is the resistance of the distributor (go and return) per metre length, then,

Voltage drop in length AD $= I_{AC} R_{AC} + I_{CD} R_{CD}$

$= (100 + x) \times 100\,r + x \times 150\,r$

Voltage drop in length BD $= \dfrac{i\,r\,l^2}{2} + (60 - x) \times 250\,r$

$= \dfrac{1 \times r \times (200)^2}{2} + (60 - x) \times 250\,r$

Since the feeding points A and B are at the same potential,

∴ $(100 + x) \times 100\,r + x \times 150\,r = \dfrac{1 \times r \times (200)^2}{2} + (60 - x)\,250\,r$

or $100x + 10000 + 150x = 20000 + 15000 - 250x$

or $500x = 25000$ ∴ $x = 50$ A

* Drop due to uniform loading can be determined by imagining that the distributor is cut into two at point D so that AD can be thought as a distributor fed at one end and loaded uniformly.

** You may carry out the calculation by assuming C to be point of minimum potential. The answer will be unaffected.

The actual directions of currents in the various sections of the distributor are shown in Fig. 13.34. Note that currents supplied by *A* and *B* meet at *D*. *Hence point D is the point of minimum potential.*

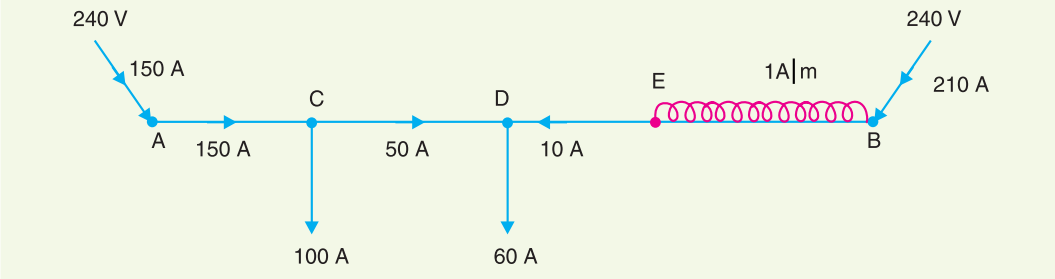

Fig. 13.34

(*ii*)

$$\text{Total current} = 160 + 1 \times 200 = 360 \text{ A}$$

$$\text{Current supplied by } A,\ I_A = 100 + x = 100 + 50 = 150 \text{ A}$$

$$\text{Current supplied by } B,\ I_B = 360 - 150 = 210 \text{ A}$$

$$\text{Minimum potential, } V_D = V_A - I_{AC} R_{AC} - I_{CD} R_{CD}$$

$$= 240 - 150 \times (100 \times 0{\cdot}001) - 50 \times (150 \times 0{\cdot}001)$$

$$= 240 - 15 - 7{\cdot}5 = \mathbf{217{\cdot}5\ V}$$

TUTORIAL PROBLEMS

1. A 2-wire d.c. distributor *AB*, 1000 m long has a total resistance of 0·1 Ω. The ends *A* and *B* are fed at 240 V. The distributor is uniformly loaded at 0.5 A/metre length and has concentrated loads of 120 A, 60 A, 100 A and 40 A at points distant 200, 400, 700 and 900 m respectively from end A. Calculate:

(*i*) the point of minimum potential

(*ii*) value of minimum potential

(*iii*) current fed at both ends **[(*i*) 400 m from A (*ii*) 231·76 V (*iii*) I_A = 366 A ; I_B = 454 A]**

2. A 2-wire d.c. distributor *AB* is 300 metres long. The end *A* is fed at 205 V and end B at 200 V. The distributor is uniformly loaded at 0·15 A/metre length and has concentrated loads of 50 A, 60 A and 40 A at points distant 75, 175, 225 m respectively from the end *A*. The resistance of each conductor is 0·15 Ω per kilometre. Calculate :

(*i*) the point of minimum potential

(*ii*) currents fed at ends *A* and *B* **[(*i*) 175 m from A (*ii*) I_A = 150 A ; I_B = 45 A]**

3. A d.c. 2-wire distributor *AB* is 450 m long and is fed at both ends at 250 V. The distributor is loaded as shown in Fig. 13.35. The resistance of each conductor is 0·05 Ω per km. Find the point of minimum potential and its potential. **[261·74 m from A ; 247·35 V]**

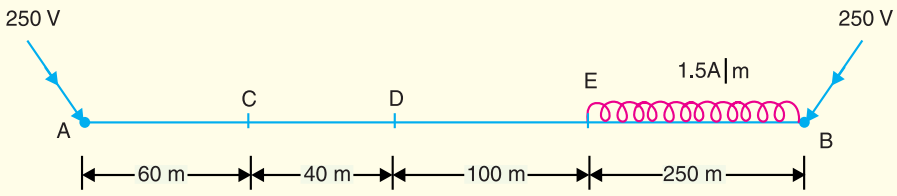

Fig. 13.35

13.8 Ring Distributor

A distributor arranged to form a closed loop and fed at one or more points is called a *ring distributor*. Such a distributor starts from one point, makes a loop through the area to be served, and returns to the

original point. For the purpose of calculating voltage distribution, the distributor can be considered as consisting of a series of open distributors fed at both ends. The principal advantage of ring distributor is that by proper choice in the number of feeding points, great economy in copper can be affected.

The most simple case of a ring distributor is the one having only one feeding point as shown in Fig. 13.36(*ii*). Here A is the feeding point and tappings are taken from points B and C. For the purpose of calculations, it is equivalent to a straight distributor fed at both ends with equal voltages.

Example 13.22. *A 2-wire d.c. ring distributor is 300 m long and is fed at 240 V at point A. At point B, 150 m from A, a load of 120 A is taken and at C, 100 m in the opposite direction, a load of 80 A is taken. If the resistance per 100 m of single conductor is 0·03 Ω, find :*

(*i*) *current in each section of distributor*

(*ii*) *voltage at points B and C*

Solution.

Resistance per 100 m of distributor

$= 2 \times 0{\cdot}03 = 0{\cdot}06\,\Omega$

Resistance of section AB, $R_{AB} = 0{\cdot}06 \times 150/100 = 0{\cdot}09\,\Omega$

Resistance of section BC, $R_{BC} = 0{\cdot}06 \times 50/100 = 0{\cdot}03\,\Omega$

Resistance of section CA, $R_{CA} = 0{\cdot}06 \times 100/100 = 0{\cdot}06\,\Omega$

(*i*) Let us suppose that a current I_A flows in section AB of the distributor. Then currents in sections BC and CA will be $(I_A - 120)$ and $(I_A - 200)$ respectively as shown in Fig. 13.36 (*i*).

According to Kirchhoff's voltage law, the voltage drop in the closed loop $ABCA$ is zero *i.e.*

$$I_{AB} R_{AB} + I_{BC} R_{BC} + I_{CA} R_{CA} = 0$$

or $$0{\cdot}09\, I_A + 0{\cdot}03\,(I_A - 120) + 0{\cdot}06\,(I_A - 200) = 0$$

or $$0{\cdot}18\, I_A = 15{\cdot}6$$

$\therefore$ $$I_A = 15{\cdot}6/0{\cdot}18 = 86{\cdot}67 \text{ A}$$

The actual distribution of currents is as shown in Fig. 13.36 (*ii*) from where it is seen that B is the point of minimum potential.

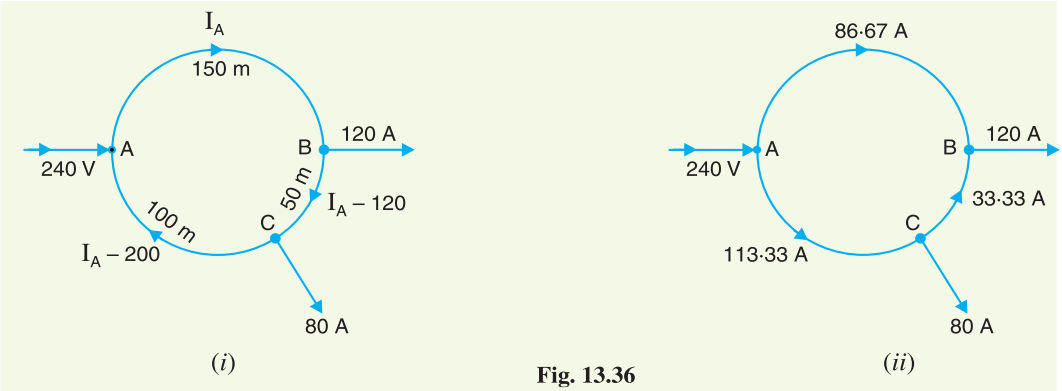

Fig. 13.36

Current in section AB, $I_{AB} = I_A =$ **86·67 A** *from A to B*

Current in section BC, $I_{BC} = I_A - 120 = 86{\cdot}67 - 120 = -33{\cdot}33$ A

$=$ **33.33 A** *from C to B*

Current in section CA, $I_{CA} = I_A - 200 = 86{\cdot}67 - 200 = -113{\cdot}33$ A

$=$ **113 ·33 A** *from A to C*

(*ii*) Voltage at point B, $V_B = V_A - I_{AB} R_{AB} = 240 - 86{\cdot}67 \times 0{\cdot}09 =$ **232·2 V**

Voltage at point C, $V_C = V_B + I_{BC} R_{BC}$

$= 232{\cdot}2 + 33{\cdot}33 \times 0{\cdot}03 =$ **233·2 V**

Example 13.23. *A 2-wire d.c. distributor ABCDEA in the form of a ring main is fed at point A at 220 V and is loaded as under :*

10A at B ; 20A at C ; 30A at D and 10 A at E.

The resistances of various sections (go and return) are : AB = 0·1 Ω ; BC = 0·05 Ω ; CD = 0·01 Ω ; DE = 0·025 Ω and EA = 0·075 Ω. Determine :

(*i*) *the point of minimum potential*

(*ii*) *current in each section of distributor*

Solution. Fig. 13.37 (*i*) shows the ring main distributor. Let us suppose that current I flows in section AB of the distributor. Then currents in the various sections of the distributor are as shown in Fig. 13.37 (*i*).

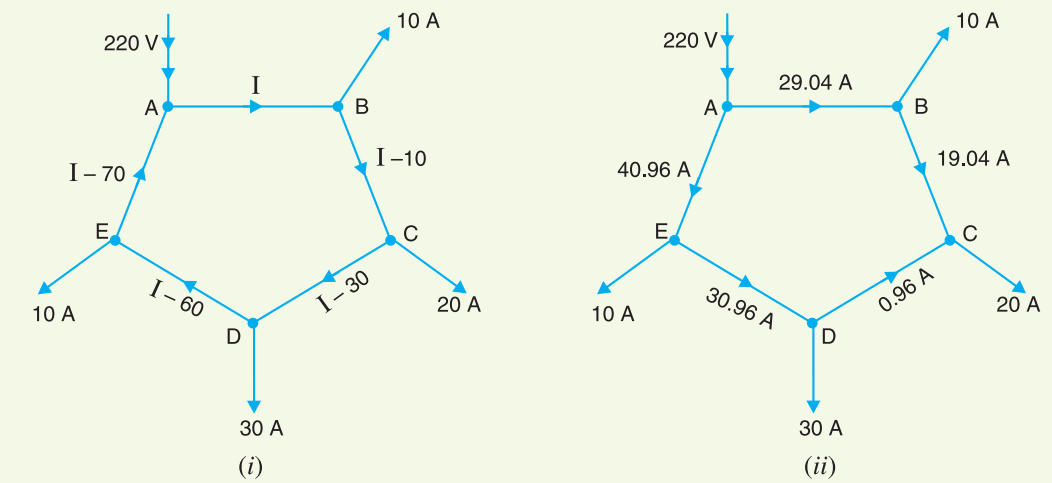

Fig. 13.37

(*i*) According to Kirchhoff's voltage law, the voltage drop in the closed loop $ABCDEA$ is zero *i.e.*

$I_{AB} R_{AB} + I_{BC} R_{BC} + I_{CD} R_{CD} + I_{DE} R_{DE} + I_{EA} R_{EA} = 0$

or $0{\cdot}1I + 0{\cdot}05\,(I - 10) + 0{\cdot}01\,(I - 30) + 0{\cdot}025\,(I - 60) + 0{\cdot}075\,(I - 70) = 0$

or $0{\cdot}26\,I = 7{\cdot}55$

$\therefore$ $I = 7{\cdot}55/0{\cdot}26 = 29{\cdot}04$ A

The actual distribution of currents is as shown in Fig. 13.37 (*ii*) from where it is clear that C is the point of minimum potential.

$\therefore$ C is the point of minimum potential.

(*ii*) Current in section AB = $I =$ **29·04 A** *from A to B*

Current in section BC = $I - 10 = 29{\cdot}04 - 10 =$ **19·04 A** *from B to C*

Current in section CD = $I - 30 = 29{\cdot}04 - 30 = -0{\cdot}96$ A = **0·96 A** *from D to C*

Current in section DE = $I - 60 = 29{\cdot}04 - 60 = -30{\cdot}96$ A = **30·96 A** *from E to D*

Current in section EA = $I - 70 = 29{\cdot}04 - 70 = -40{\cdot}96$ A = **40·96 A** *from A to E*

13.9 Ring Main Distributor with Interconnector

Sometimes a ring distributor has to serve a large area. In such a case, voltage drops in the various sections of the distributor may become excessive. In order to reduce voltage drops in various sections, distant points of the distributor are joined through a conductor called *interconnector*. Fig.

13.38 shows the ring distributor *ABCDEA*. The points *B* and *D* of the ring distributor are joined through an interconnector *BD*. There are several methods for solving such a network. However, the solution of such a network can be readily obtained by applying Thevenin's theorem. The steps of procedure are :

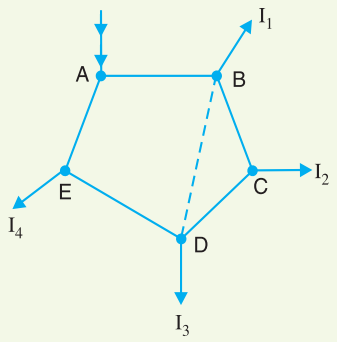

Fig. 13.38

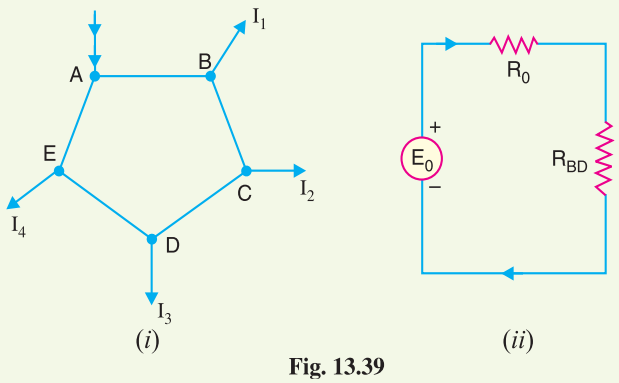

Fig. 13.39

(*i*) Consider the interconnector *BD* to be disconnected [See Fig. 13.39 (*i*)] and find the potential difference between *B* and *D*. This gives Thevenin's equivalent circuit voltage E_0.

(*ii*) Next, calculate the resistance viewed from points *B* and *D* of the network composed of distribution lines only. This gives Thevenin's equivalent circuit series resistance R_0.

(*iii*) If R_{BD} is the resistance of the interconnector *BD*, then Thevenin's equivalent circuit will be as shown in Fig. 13.39 (*ii*).

$$\therefore \qquad \text{Current in interconnector } BD = \frac{E_0}{R_0 + R_{BD}}$$

Therefore, current distribution in each section and the voltage of load points can be calculated.

Example 13.24. *A d.c. ring main ABCDA is fed from point A from a 250 V supply and the resistances (including both lead and return) of various sections are as follows : AB = 0·02 Ω ; BC = 0·018 Ω ; CD = 0·025 Ω and DA = 0·02 Ω. The main supplies loads of 150 A at B ; 300 A at C and 250 A at D. Determine the voltage at each load point.*

If the points A and C are linked through an interconnector of resistance 0·02 Ω, determine the new voltage at each load point.

Solution.

Without Interconnector. Fig. 13.40 (*i*) shows the ring distributor without interconnector. Let us suppose that a current *I* flows in section *AB* of the distributor. Then currents in various sections of the distributor will be as shown in Fig. 13.40 (*i*).

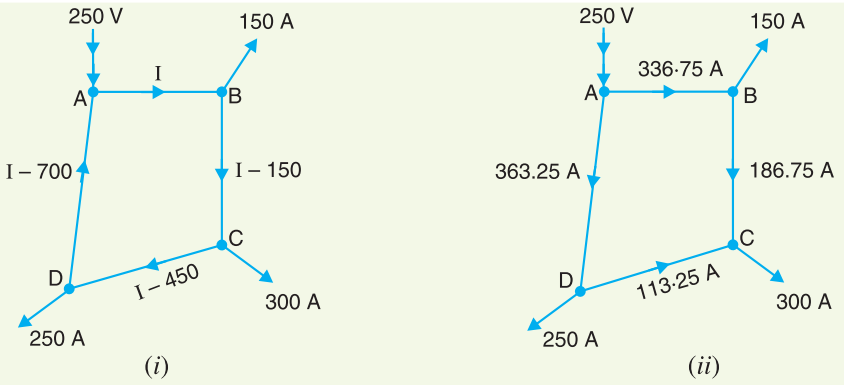

Fig. 13.40

According to Kirchhoff's voltage law, the voltage drop in the closed loop *ABCDA* is zero *i.e.*

$$I_{AB} R_{AB} + I_{BC} R_{BC} + I_{CD} R_{CD} + I_{DA} R_{DA} = 0$$

or $0{\cdot}02I + 0{\cdot}018\,(I - 150) + 0{\cdot}025\,(I - 450) + 0{\cdot}02\,(I - 700) = 0$

or $0{\cdot}083\,I = 27{\cdot}95$

$\therefore$ $I = 27{\cdot}95/0{\cdot}083 = 336{\cdot}75$ A

The actual distribution of currents is as shown in Fig. 13.40 (*ii*).

Voltage drop in *AB* = $336{\cdot}75 \times 0{\cdot}02 = 6{\cdot}735$ V

Voltage drop in *BC* = $186{\cdot}75 \times 0{\cdot}018 = 3{\cdot}361$ V

Voltage drop in *CD* = $113{\cdot}25 \times 0{\cdot}025 = 2{\cdot}831$ V

Voltage drop in *DA* = $363{\cdot}25 \times 0{\cdot}02 = 7{\cdot}265$ V

$\therefore$ Voltage at point *B* = $250 - 6{\cdot}735 =$ **243·265 V**

Voltage at point *C* = $243{\cdot}265 - 3{\cdot}361 =$ **239·904 V**

Voltage at point *D* = $239{\cdot}904 + 2{\cdot}831 =$ **242·735 V**

With Interconnector. Fig. 13.41 (*i*) shows the ring distributor with interconnector *AC*. The current in the interconnector can be found by applying Thevenin's theorem.

E_0 = Voltage between points *A* and *C*

$= 250 - 239{\cdot}904 = 10{\cdot}096$ V

R_0 = Resistance viewed from points *A* and *C*

$$= \frac{(0\cdot02 + 0\cdot018)(0\cdot02 + 0\cdot025)}{(0\cdot02 + 0\cdot018) + (0\cdot02 + 0\cdot025)} = 0\cdot02\ \Omega$$

R_{AC} = Resistance of interconnector = $0{\cdot}02\,\Omega$

Thevenin's equivalent circuit is shown in Fig. 13.41 (*ii*). Current in interconnector *AC*

$$= \frac{E_0}{R_0 + R_{AC}} = \frac{10\cdot096}{0\cdot02 + 0\cdot02} = 252\cdot4\ A \textit{ from A to C}$$

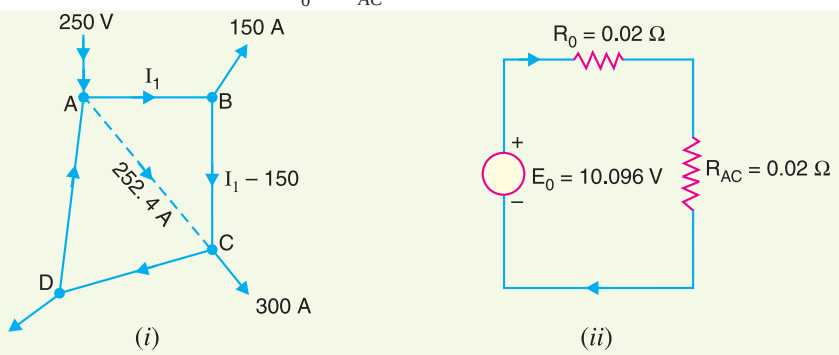

Fig. 13.41

Let us suppose that current in section *AB* is I_1. Then current in section *BC* will be $I_1 - 150$. As the voltage drop round the closed mesh *ABCA* is zero,

$\therefore$ $0{\cdot}02\,I_1 + 0{\cdot}018\,(I_1 - 150) - 0{\cdot}02 \times 252{\cdot}4 = 0$

or $0{\cdot}038\,I_1 = 7{\cdot}748$

$\therefore$ $I_1 = 7{\cdot}748/0{\cdot}038 = 203{\cdot}15$ A

The actual distribution of currents in the ring distributor with interconnector will be as shown in Fig. 13.42.

Drop in *AB* = $203{\cdot}15 \times 0{\cdot}02 = 4{\cdot}063$ V

Drop in BC = $53{\cdot}15 \times 0{\cdot}018$

= $0{\cdot}960$ V

Drop in AD = $244{\cdot}45 \times 0{\cdot}02 = 4{\cdot}9$ V

∴ Potential of B = $250 - 4{\cdot}063$

= **245·93 V**

Potential of C = $245{\cdot}93 - 0{\cdot}96$

= **244·97 V**

Potential of D = $250 - 4{\cdot}9$ = **245·1 V**

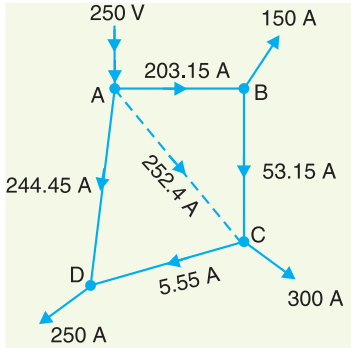

Fig. 13.42

It may be seen that with the use of interconnector, the voltage drops in the various sections of the distributor are reduced.

Example 13.25. *Fig. 13.43 shows a ring distributor with interconnector BD. The supply is given at point A. The resistances of go and return conductors of various sections are indicated in the figure. Calculate :*

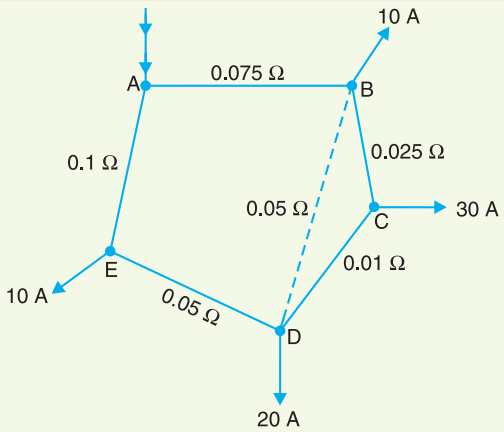

Fig. 13.43

(*i*) *current in the interconnector*

(*ii*) *voltage drop in the interconnector*

Solution. When interconnector BD is removed, let the current in branch AB be I. Then current distribution will be as shown in Fig. 13.44 (*i*). As the total drop round the ring $ABCDEA$ is zero,

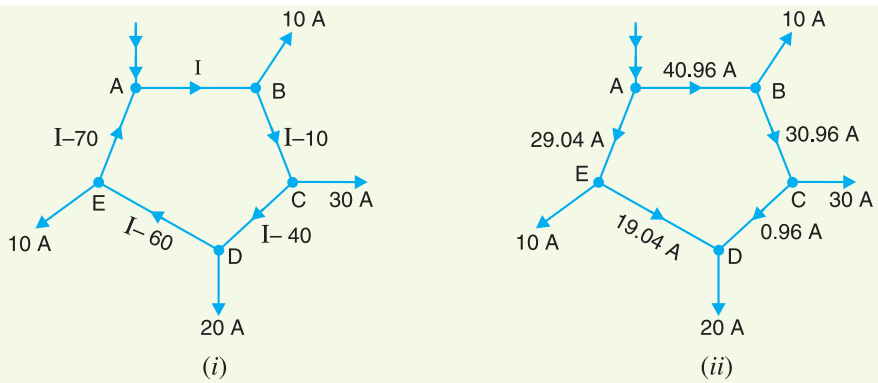

Fig. 13.44

∴ $0{\cdot}075\,I + 0{\cdot}025\,(I - 10) + 0{\cdot}01\,(I - 40) + 0{\cdot}05\,(I - 60) + 0{\cdot}1\,(I - 70) = 0$

or $0{\cdot}26\,I = 10{\cdot}65$

$\therefore \quad I = \dfrac{10\cdot65}{0\cdot26} = 40\cdot96$ A

The actual distribution of currents will be as shown in Fig. 13.44 (*ii*).

Voltage drop along *BCD* $= 30{\cdot}96 \times 0{\cdot}025 + 0{\cdot}96 \times 0{\cdot}01$

$= 0{\cdot}774 + 0{\cdot}0096 = 0{\cdot}7836$ V

This is equal to Thevenin's open circuited voltage E_0 *i.e.*

$E_0 = 0{\cdot}7836$ V

R_0 = Resistance viewed from *B* and *D*

$$= \frac{(0\cdot075+0\cdot1+0\cdot05)(0\cdot025+0\cdot01)}{(0\cdot075+0\cdot1+0\cdot05)+(0\cdot025+0\cdot01)}$$

$$= \frac{(0\cdot225)(0\cdot035)}{0\cdot225+0.035} = 0\cdot03\,\Omega$$

(*i*) Current in interconnector *BD* is

$$I_{BD} = \frac{E_0}{R_0 + R_{BD}} = \frac{0\cdot7836}{0\cdot03+0.05} = \mathbf{9.8\ A}$$

(*ii*) Voltage drop along interconnector *BD*

$= I_{BD}\,R_{BD} = 9{\cdot}8 \times 0{\cdot}05 = \mathbf{0{\cdot}49\ V}$

TUTORIAL PROBLEMS

1. A 300 m ring distributor has loads as shown in Fig. 13.45 where distances are in metres. The resistance of each conductor is 0·2 W per 1000 metres and the loads are tapped off at points *B*, *C* and *D* as shown. If the distributor is fed at A at 240 V, find voltages at *B*, *C* and *D*.

[V_B = 236·9 V ; V_C = 235·97 V ; V_D = 237·45 V]

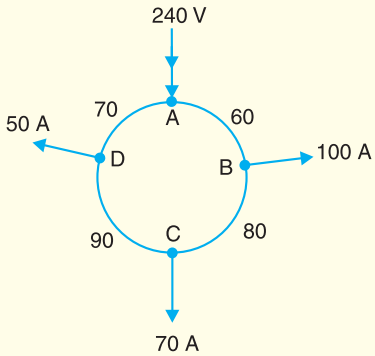

Fig. 13.45

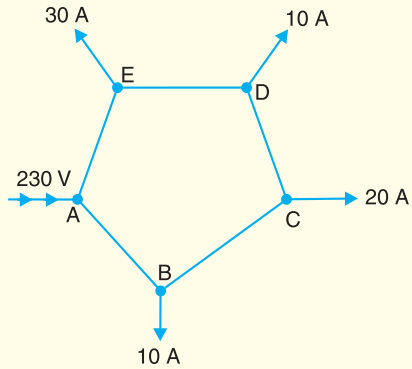

Fig. 13.46

2. A d.c. 2-wire ring main *ABCDEA* is fed from 230 V supply as shown in Fig. 13.46. The resistance of each section (go and return) *AB*, *BC*, *CD*, *DE* and *EA* is 0·1 W. The loads are tapped off as shown. Find the voltage at each load point.

[V_B = 227 V ; V_C = 225 V ; V_D = 225 V ; V_E = 226 V]

3. In the d.c. network shown in Fig.13.47, A is the feeding point and is maintained at 250 V. The resistances

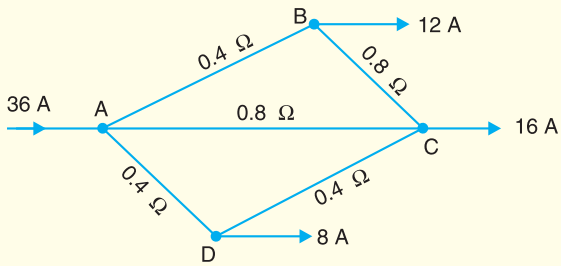

Fig. 13.47

of the various branches (go and return) are indicated in the figure. Determine the current in each branch. **[*AB* = 144A ; *BC* = 2A ; *DC* = 5A ; *AD* = 13A]**

13.10 3-Wire D.C. System

The great disadvantage of direct current for general power purposes lies in the fact that its voltage cannot readily be changed, except by the use of rotating machinery, which in most cases is too expensive. The problem can be solved to a limited extent by the use of 3-wire d.c. system which makes available two voltages *viz*. V volts between any outer and neutral and 2V volts between the outers. Motor loads requiring high voltage are connected between the outers whereas lighting and heating loads requiring less voltage are connected between any one outer and the neutral. Due to the availability of two voltages, 3-wire system is preferred over 2-wire system for d.c. distribution.

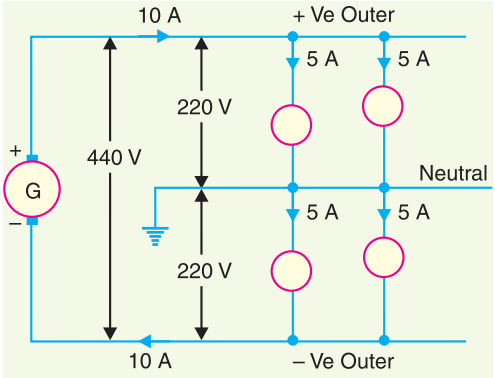

Fig. 13.48

Fig. 13.48 shows the general principles of a 3-wire d.c. system. It consists of two outers and a middle or neutral wire which is earthed at the generator end. The potential of the neutral wire is *half-way between the potentials of the outers. Thus, if p.d. between the outers is 440 V, then positive outer is at 220 V *above* the neutral and negative outer is 220 V *below* the neutral. The current in the neutral wire will depend upon the loads applied to the two sides.

(*i*) If the loads applied on both sides of the neutral are equal (*i.e.* balanced) as shown in Fig 13.48, the current in the neutral wire will be zero. Under these conditions, the potential of the neutral will be exactly half-way between the potential difference of the outers.

(*ii*) If the load on the positive outer (I_1) is greater than on the negative outer (I_2), then out of balance current $I_1 - I_2$ will flow in the neutral wire from load end to supply end as shown in Fig. 13.49 (*i*). Under this condition, the potential of neutral wire will no longer be midway between the potentials of the outers.

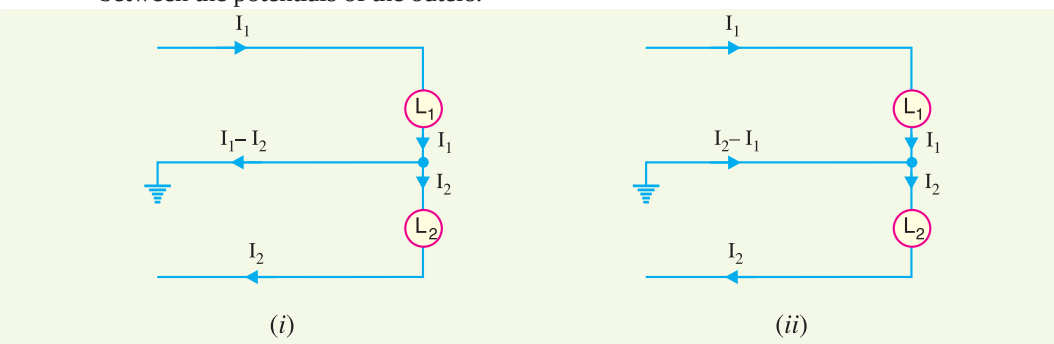

Fig. 13.49

(*iii*) If the load on the negative outer (I_2) is greater than on the positive outer (I_1), then out of balance current $I_2 - I_1$ will flow in the neutral from supply end to load end as shown in Fig. 13.49 (*ii*). Again, the neutral potential will not remain half-way between that of the outers.

(*iv*) As the neutral carries only the out of balance current which is generally small, therefore, area of X-section of neutral is taken half as compared to either of the outers.

It may be noted that it is desirable that voltage between any outer and the neutral should have the same value. This is achieved by distributing the loads equally on both sides of the neutral.

* For balanced loads *i.e.* equal loads on both sides of the neutral wire.

13.11 Current Distribution in 3-Wire D.C. System

Fig. 13.50 shows a 3-wire 500/250 V d.c. distributor. Typical values of loads have been assumed to make the treatment more illustrative. The motor requiring 500 V is connected across the outers and takes a current of 75 A. Other loads requiring lower voltage of 250 V are connected on both sides of the neutral.

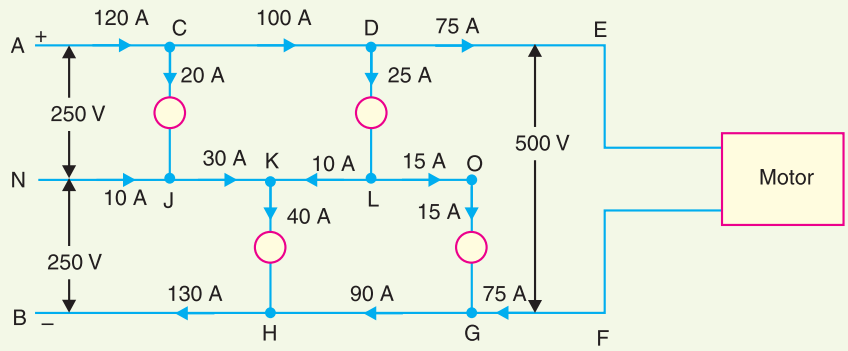

Fig. 13.50

Applying Kirchhoff's current law, it is clear that a current of 120 A enters the positive outer while 130 A comes out of the negative outer. Therefore, 130 – 120 = 10 A must flow *in* the neutral at point *N*. Once the magnitude and direction of current in the section *NJ* is known, the directions and magnitudes of currents in the other sections of the neutral can be easily determined. For instance, the currents meeting at point *K* must add up to 40 A to supply the load *KH*. As seen in Fig. 13.50, 20A of *CJ* and 10A of *NJ* flow towards *K*, the remaining 10A coming from point *L*. The current of 25A of load *DL* is divided into two parts ; 10A flowing along section *LK* and the remaining 15 A along the section *LO* to supply the load *OG*.

Load-point voltages. Knowing the currents in the various sections of the outers and neutral, the voltage at any load point can be determined provided resistances are known. As an illustration, let us calculate the voltage across load *CJ* of Fig.13.50. Applying Kirchhoff's voltage law to the loop *ACJNA*, we have,

[Algebraic sum of voltage drops] + [Algebraic sum of e.m.f.s.] = 0

or *[– drop in *AC* – voltage across *CJ* + drop in *NJ*] + [250] = 0

or Voltage across *CJ* = 250 – drop in *AC* + drop in *NJ*

Example 13.26. *A load supplied on 3-wire d.c. system takes a current of 50 A on the +ve side and 40 A on the negative side. The resistance of each outer wire is 0·1 Ω and the cross-section of middle wire is one-half of that of outer. If the system is supplied at 500/250 V, find the voltage at the load end between each outer and middle wire.*

Solution. Fig. 13.51 shows the current loading. Obviously, current in the neutral wire is 50 – 40 = 10A. As the X-sectional area of neutral is half that of outer, therefore, its resistance = 2 × 0·1 = 0·2Ω.

Voltage at the load end on the +ve side,

$$V_{EL} = 250 - I_1 R_{AE} - (I_1 - I_2) R_{NL}$$
$$= 250 - 50 \times 0{\cdot}1 - (10) \times 0{\cdot}2 = \mathbf{243\ V}$$

Voltage at the load end on the –ve side,

* Remember, rise in potential should be considered positive while fall in potential should be considered negative. In section *AC*, current flows from *A* to *C* and hence there is fall in potential. In section *JN*, obviously, there is rise in potential.

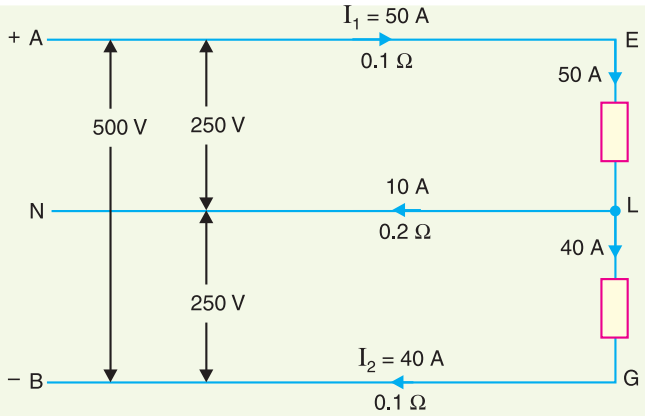

Fig. 13.51

$$V_{LG} = 250 + (I_1 - I_2)\, R_{NL} - I_2\, R_{BG}$$
$$= 250 + 10 \times 0{\cdot}2 - 40 \times 0{\cdot}1 = \mathbf{248\ V}$$

Example 13.27. *A 3-wire d.c. distribution system supplies a load of 5 Ω resistance across the +ve outer and neutral and a load of 6 Ω resistance across –ve outer and neutral at the far end of the distributor. The resistance of each conductor is 0·1 Ω. If the voltage between any outer and neutral at the load end is to be kept at 240 V, find the feeding end voltages.*

Solution. Fig. 13.52 shows the 3-wire distribution system.

Current on +ve outer, $I_1 = 240/5 = 48\text{A}$

Current on –ve outer, $I_2 = 240/6 = 40\text{A}$

Current in neutral $= I_1 - I_2 = 48 - 40 = 8\text{A}$

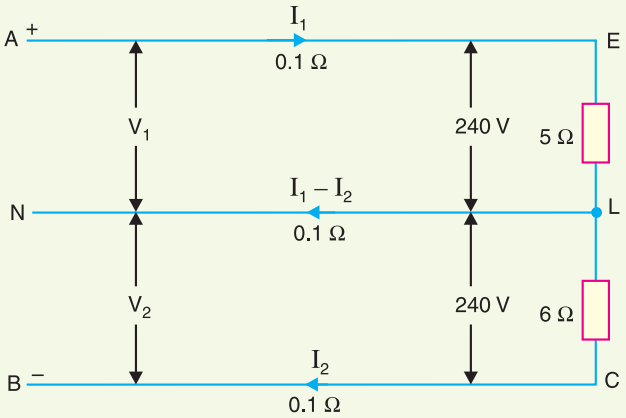

Fig. 13.52

Voltage between +ve outer and neutral at feeding end is

$$V_1 = V_{EL} + I_1\, R_{AE} + (I_1 - I_2)\, R_{NL}$$
$$= 240 + 48 \times 0{\cdot}1 + 8 \times 0{\cdot}1 = \mathbf{245{\cdot}6\ V}$$

Voltage between –ve outer and neutral at feeding end is

$$V_2 = V_{LC} - (I_1 - I_2)\, R_{NL} + I_2\, R_{BC}$$
$$= 240 - 8 \times 0{\cdot}1 + 40 \times 0{\cdot}1 = \mathbf{243{\cdot}2\ V}$$

Example 13.28. *A 3-wire 500/250 V d.c. system has a load of 35 kW between the positive lead and the middle wire and a load of 20 kW between the negative lead and the middle wire. If there is a break in the middle wire, calculate the voltage between the outers and the middle wire.*

Solution. Fig. 13.53 (*i*) shows the arrangement before the disconnection of the middle wire. The voltages on the two sides of the middle wire are equal *i.e.* 250 V. Let R_1 be the resistance of load on the +ve side and R_2 be the resistance of load on the negative side.

$$R_1 = \frac{(250)^2}{35 \times 10^3} = 1{\cdot}785\,\Omega \;\; ; \;\; R_2 = \frac{(250)^2}{20 \times 10^3} = 3{\cdot}125\,\Omega \qquad [\because R = V^2/P]$$

When there is a break in the middle wire, two resistances R_1 and R_2 are put in series across 500 V as shown in Fig. 13.53 (*ii*).

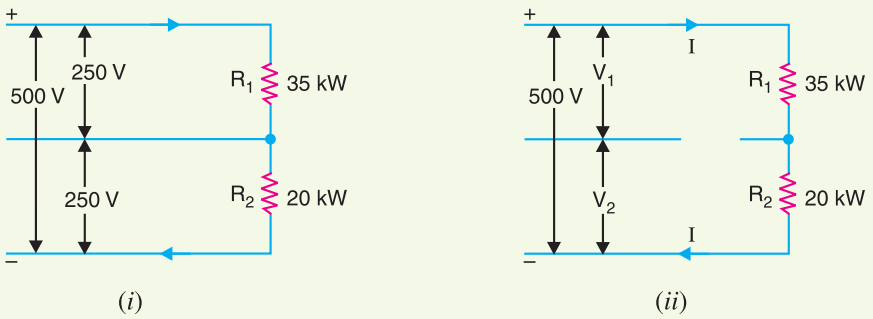

Fig. 13.53

∴ Circuit current, $I = \dfrac{500}{R_1 + R_2} = \dfrac{500}{1{\cdot}785 + 3{\cdot}125} = 101{\cdot}83$ A

∴ Voltage across +ve outer and middle wire,

$$V_1 = I R_1 = 101{\cdot}83 \times 1{\cdot}785 = \mathbf{181{\cdot}8\ V}$$

Voltage across –ve outer and middle wire,

$$V_2 = I R_2 = 101{\cdot}83 \times 3{\cdot}125 = \mathbf{318{\cdot}2\ V}$$

Example 13.29. *A 3-wire, 500/250 V distributor is loaded as shown in Fig. 13.54. The resistance of each section is given in ohm. Find the voltage across each load point.*

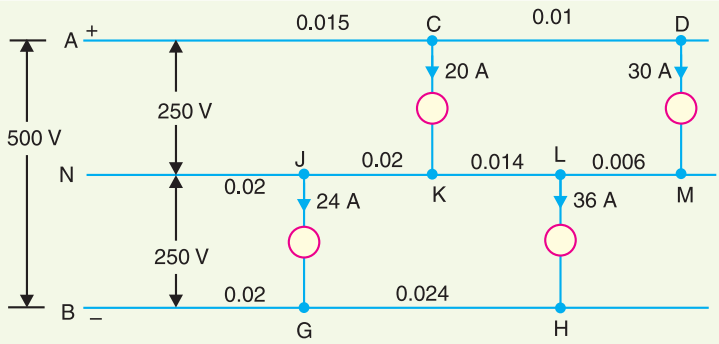

Fig. 13.54

Solution. From the current loading given in Fig. 13.54, we can find the magnitudes and directions of currents in the various sections by applying Kirchhoff's current law. Fig. 13.55 shows the magnitudes and directions of currents in the various sections.

The voltage drops in the various sections are worked out below.

Section	*Resistance* (Ω)	*Current* (*A*)	*Drop* (*V*)
AC	0·015	50	0·75
CD	0·01	30	0·3
ML	0·006	30	0·18
KL	0·014	6	0·084
KJ	0·02	14	0·28
NJ	0·02	10	0·2
HG	0·024	36	0·864
GB	0·02	60	1·2

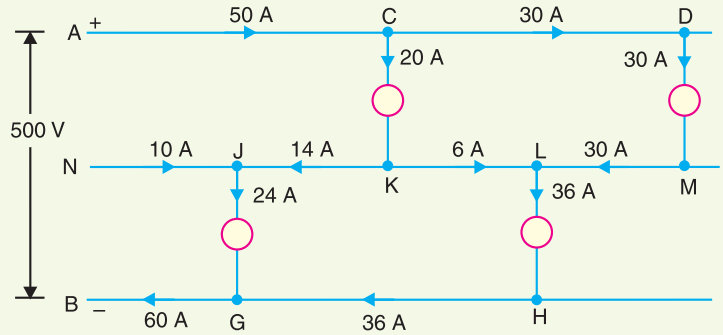

Fig. 13.55

Voltage across load *CK* = 250 – Drop in *AC* – Drop in *KJ* + Drop in *NJ*

= 250 – 0·75 – 0·28 + 0·2 = **249·17 V**

Voltage across load *DM* = 249·17 – Drop in *CD* – Drop in *ML* + Drop in *KL*

= 249·17 – 0·3 – 0·18 + 0·084 = **248·774 V**

Voltage across load *JG* = 250 – Drop in *NJ* – Drop in *GB*

= 250 – 0·2 – 1·2 = **248·6 V**

Voltage across load *LH* = 248·6 + Drop in *KJ* – Drop in *KL* – Drop in *HG*

= 248·6 + 0·28 – 0·084 – 0·864 = **247·932 V**

Example 13.30. *A 3-wire d.c. distributor AE 600 m long is supplied at end A at 500/250 V and is loaded as under :*

Positive side : 60A, 200 m from A ; 40 A, 360 m from A

Negative side : 20A, 100 m from B ; 60A, 260 m from B and 15A, 600 m from B

The resistance of each outer is 0·02 Ω per 100 metres and the cross-section of the neutral wire is the same as that of the outer. Find the voltage across each load point.

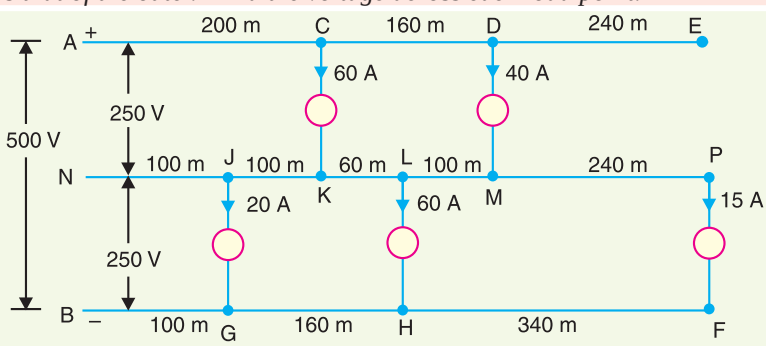

Fig. 13.56

Solution. From the current loading given in Fig. 13.56, we can find the magnitudes and directions of currents in the various sections by Kirchhoff's current law as shown in Fig. 13.57. As the neutral is of same cross-section, its resistance is 0·02 Ω per 100 metres. The voltage drops in the various sections are worked out below :

Section	*Resistance* (Ω)	*Current* (*A*)	*Drop* (*V*)
AC	0·02 × 200/100 = 0·04	100	4
CD	0·02 × 160/100 = 0·032	40	1·28
MP	0·02 × 240/100 = 0·048	15	0·72
ML	0·02 × 100/100 = 0·02	25	0·5
KL	0·02 × 60/100 = 0·012	35	0·42
KJ	0·02 × 100/100 = 0·02	25	0·5
JN	0·02 × 100/100 = 0·02	5	0·1
FH	0·02 × 340/100 = 0·068	15	1·02
HG	0·02 × 160/100 = 0·032	75	2·4
GB	0·02 × 100/100 = 0·02	95	1·9

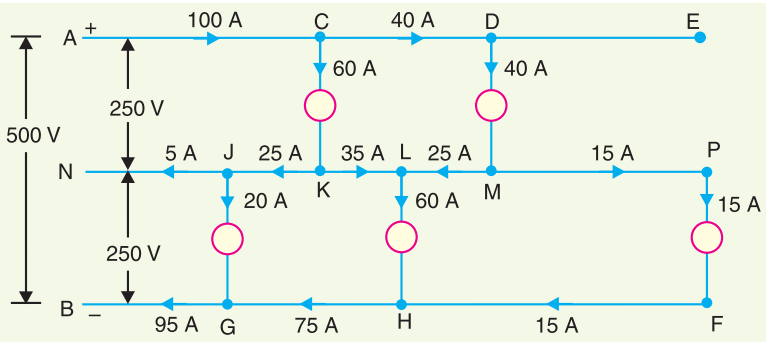

Fig. 13.57

Voltage across *CK* = 250 – Drop in *AC* – Drop in *KJ* – Drop in *JN*
= 250 – 4 – 0·5 – 0·1 = **245·4 V**

Voltage across *DM* = 245·4 – Drop in *CD* – Drop in *ML* + Drop in *KL*
= 245·4 – 1·28 – 0·5 + 0·42 = **244·04 V**

Voltage across *JG* = 250 + Drop in *JN* – Drop in *GB*
= 250 + 0·1 – 1·9 = **248·2 V**

Voltage across *LH* = 248·2 + Drop in *KJ* – Drop in *KL* – Drop in *HG*
= 248·2 + 0·5 – 0·42 – 2·4 = **245·88 V**

Voltage across *PF* = 245·88 + Drop in *ML* – Drop in *MP* – Drop in *FH*
= 245·88 + 0·5 – 0·72 – 1·02 = **244·64 V**

Example 13.31. *The 3-wire d.c. system supplies a load of 4 Ω resistance across +ve wire and the neutral wire and a load of 6 Ω resistance across –ve outer and the neutral at the far end of the distributor. The resistance of each conductor is 0.15 Ω and voltage across each outer and neutral is 240 V at the load end. Determine the load current and load voltages when there is a break in the (i) neutral wire (ii) positive outer (iii) negative outer. Assume that the load resistances and the feeding end voltages remain the same.*

Solution. Fig. 13.58 shows the conditions of the problem when the system is healthy. Let us find the feeding end voltages.

Current in the positive outer, $I_1 = 240/4 = 60$ A

Current in the negative outer, $I_2 = 240/6 = 40$ A

Current in the neutral wire $= I_1 - I_2 = 60 - 40 = 20$ A

Voltage between +ve outer and neutral at feeding point is

$$V_1 = V_{EL} + I_1 R_{AE} + (I_1 - I_2) R_{NL}$$
$$= 240 + 60 \times 0{\cdot}15 + 20 \times 0{\cdot}15 = 252 \text{ V}$$

Voltage between –ve outer and neutral at feeding point is

$$V_2 = V_{LC} - (I_1 - I_2) R_{NL} + I_2 R_{BC}$$
$$= 240 - 20 \times 0{\cdot}15 + 40 \times 0{\cdot}15 = 243 \text{ V}$$

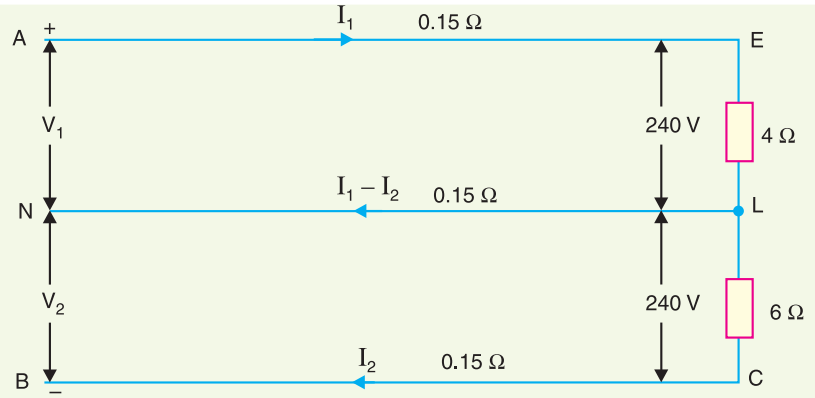

Fig. 13.58

(i) **When neutral breaks.** When there is a break in the neutral, the system is equivalent to 2-wire d.c. system having load resistance = 4 + 6 = 10 Ω and p.d. = 252 + 243 = 495 V at the feeding end. If I is the load current, then,

Total circuit resistance $= 10 + 0{\cdot}15 + 0{\cdot}15 = 10{\cdot}3\Omega$

$\therefore$ Load current, $I = 495/10{\cdot}3 =$ **48·06 A**

Voltage across 4 Ω resistance $= I \times 4 = 48{\cdot}06 \times 4 =$ **192·24 V**

Voltage across 6 Ω resistance $= I \times 6 = 48{\cdot}06 \times 6 =$ **288·36 V**

(ii) **When +ve outer breaks.** When there is a break in the +ve outer, there will be no current in 4 Ω load. The circuit is again 2-wire d.c. system but now load is 6 Ω and p.d. at the feeding point is 243 V.

Total circuit resistance $= 6 + 0{\cdot}15 + 0{\cdot}15 = 6{\cdot}3\Omega$

If I' is the load current, then,

$I' = 243/6{\cdot}3 =$ **38·57 A**

Voltage across 6 Ω $= I' \times 6 = 38{\cdot}57 \times 6 =$ **231·42 V**

(iii) **When –ve outer breaks.** When there is a break in the negative outer, there will be no current in 6 Ω load. The circuit is again 2-wire d.c. system but now load is 4 Ω and p.d. at the feeding point is 252 V.

Total circuit resistance $= 4 + 0{\cdot}15 + 0{\cdot}15 = 4{\cdot}3\Omega$

If I'' is the load current, then,

$I'' = 252/4{\cdot}3 =$ **58·6 A**

Voltage across 4 Ω $= I'' \times 4 = 58{\cdot}6 \times 4 =$ **234·42 V**

TUTORIAL PROBLEMS

1. A load supplied by a 3-wire d.c. distribution system takes a current of 600 A on the +ve side and 480 A on the –ve side. The resistance of the outer conductor is 0·015 Ω and that of the middle wire is 0·03 Ω. Determine the voltage at the load end between each outer and middle wire. Supply voltage is 500/250 V.
[+ve side : 237·4 V ; –ve side : 246·4 V]

2. A 3-wire d.c. distributor, 250 m long, is supplied at end *P* at 500/250 V and is loaded as under :
Positive side : 20 A, 150 m from *P* ; 30 A, 250 m from *P*
Negative side : 24 A, 100 m from *P* ; 36 A, 220 m from *P*
The resistance of each outer wire is 0·02 Ω per 100 m and the cross-section of the middle wire is one half that of the outer. Find the voltage across each load point.
[Positive side : 248·62 V ; 247·83 V ; Negative side : 248·4 V ; 247·65 V]

3. The 3-wire d.c. system supplies a load of 4 Ω resistance across the +ve wire and the neutral and a load of 6 Ω resistance across –ve outer and the neutral at the far end of the distributor. The resistance of each conductor is 0·15 Ω and voltage across each outer and neutral is 240 V at the load end. Calculate the feeding end voltage. **[+ve side : 252 V ; –ve side : 243 V]**

13.12 Balancers in 3-Wire D.C. System

Although in a 3-wire d.c. system every effort is made to distribute the various loads equally on both sides of the neutral, yet it is difficult to achieve the exact balance. The result is that some current does flow in the neutral wire and consequently the voltages on the two sides of the neutral do not remain equal to each other. In order to maintain voltages on the two sides of the neutral equal to each other, a *balancer set* is used.

Circuit details. Fig. 13.59 shows the use of a balancer set in a 3-wire d.c. system. The balancer consists of two identical shunt wound machines *A* and *B* coupled mechanically and having their armature and field circuits connected in series across the outers. The neutral wire is connected to the junction of the armatures as shown. The circuit arrangement has two obvious advantages. Firstly, only one generator (*G*) is required which results in a great saving in cost. Secondly, the balancer set tends to equalise the voltages on the two sides of the neutral.

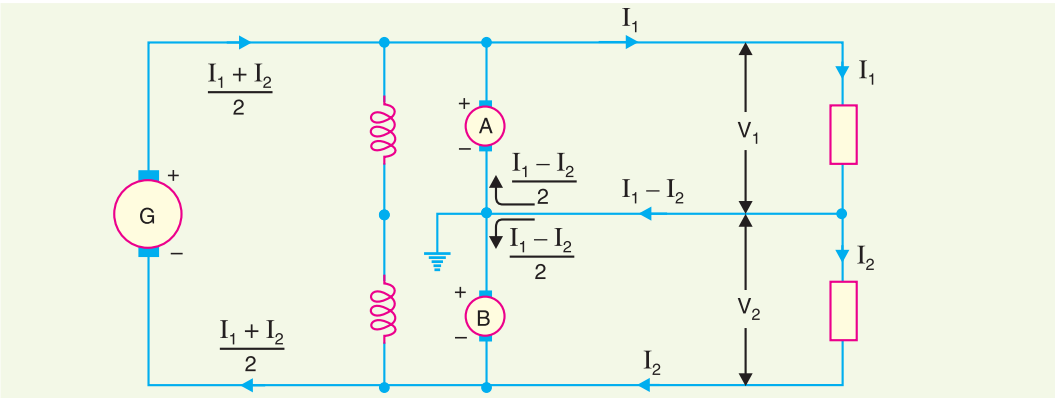

Fig. 13.59

Theory. Since the speeds and field currents of the two machines are equal, their back e.m.f.s have the same value. When the system is unloaded or when the loads on the two sides are the same (*i.e.* balanced), no current flows in the neutral wire. Hence, the two machines run as unloaded motors

When the load is unbalanced, the current supplied by the +ve outer will be different from that supplied by the negative outer. Suppose that load I_1 on the +ve outer is greater that the load I_2 on the –ve outer. Since the +ve side is more heavily loaded, p.d. on this side tends to fall below the e.m.f. of the balancer set. Therefore, machine A runs as a generator. On the other hand, p.d. on the lightly

loaded –ve side rises above the e.m.f. of the balancer so that machine *B* runs as a motor. The result is that energy is transferred from lightly loaded side to the heavily loaded side, preventing the voltage across heavily loaded side form dropping very much below the normal value.

For the condition shown in Fig. 13.59, the machine *B* acts as a motor and machine *A* as a generator. The out of balance current $I_1 - I_2$ flows through the middle wire towards the balancers. Assuming the internal losses of the two machines to be negligible, then armature currents will be equal. Hence, one-half of the current in neutral *i.e.* $(I_1 - I_2)/2$ will flow through each machine as shown.

Let R_a = armature resistance of each machine

*E = induced e.m.f. of each machine

V_1 = terminal p.d. of machine *A* running as a generator

V_2 = terminal p.d. of machine *B* running as a motor

$$\therefore \quad V_1 = E - \left(\frac{I_1 - I_2}{2}\right) R_a$$

and
$$V_2 = E + \left(\frac{I_1 - I_2}{2}\right) R_a$$

Difference of voltages between two sides

$$= V_2 - V_1$$

$$= \left[E + \left(\frac{I_1 - I_2}{2}\right) R_a\right] - \left[E - \left(\frac{I_1 - I_2}{2}\right) R_a\right]$$

$$= (I_1 - I_2)\, R_a$$

It is clear that difference of voltages between the two sides of the system is proportional to

(*i*) the out-of-balance current $I_1 - I_2$

(*ii*) the armature resistance of balancer

Therefore, in order to keep the voltages on the two sides equal, R_a is kept small and loads are arranged on the two sides in such a way that out of balance current is as small as possible.

The difference of voltages $(V_2 - V_1)$ on the two sides can be further reduced by cross-connecting the shunt fields of the balancer set as shown in Fig. 13.60. As the generating machine *A* draws its excitation from lightly loaded side which is at a higher voltage, therefore, induced e.m.f. of the machine is increased. On the other hand, induced e.m.f. of machine *B* is decreased since it draws its excitation from the heavily loaded side. The result is that the difference $V_2 - V_1$ is decreased considerably. It may be noted that a perfect balance cannot be obtained because the operation of the balancer set depends upon a slight unbalancing of the voltages on the two sides.

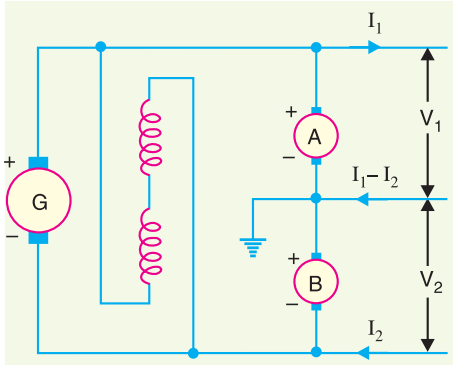

Fig. 13.60

Example 13.32. *A d.c. 3-wire system with 500 V between the outers supplies 1500 kW on the +ve outer and 2000 kW on the negative outer. If the losses in the machines are negligible, calculate:*

(*i*) *current in the neutral wire*

(*ii*) *total current supplied by main generator*

(*iii*) *current in each balancer armature*

Solution. The connections are shown in Fig. 13.61. As the negative side is more heavily loaded, therefore, machine *B* acts as a generator and machine *A* as a motor.

* Since both machines have the same excitation and run at the same speed, their induced e.m.f.s will be same.

Load current on +ve outer, $I_1 = 1500 \times 10^3/250 = 6000$ A

Load current on –ve outer, $I_2 = 2000 \times 10^3/250 = 8000$ A

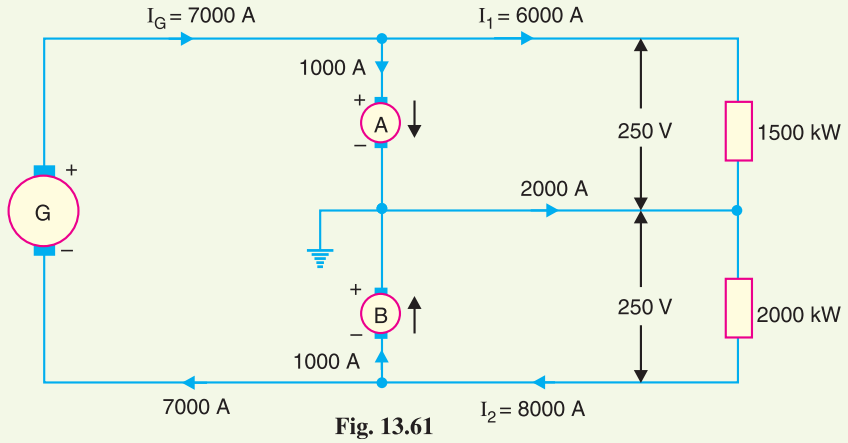

Fig. 13.61

(i) Current in the neutral $= I_2 - I_1 = 8000 - 6000 =$ **2000 A**

(ii) Total load on main generator $= 1500 + 2000 = 3500$ kW

∴ Current supplied by main generator, $I_G = 3500 \times 10^3/500 =$ **7000 A**

(iii) Current in machine *A* $= I_G - I_1 = 7000 - 6000 =$ **1000 A**

Current in machine *B* $= I_2 - I_G = 8000 - 7000 =$ **1000 A**

Example 13.33. *A d.c. 3-wire system with 500 V between outers has lighting loads of 150 kW on the positive side and 100 kW on the negative side. The loss in each balancer machine is 3 kW. Calculate :*

(*i*) *total load on the main generator*

(*ii*) *kW loading of each balancer machine*

Solution. The connections are shown in Fig. 13.62. As the positive side is more heavily loaded, therefore, machine *A* acts as a generator and machine *B* as a motor.

(i) Total load on the main generator

= load on +ve side + load on –ve side + losses

$= 150 + 100 + 2 \times 3 =$ **256 kW**

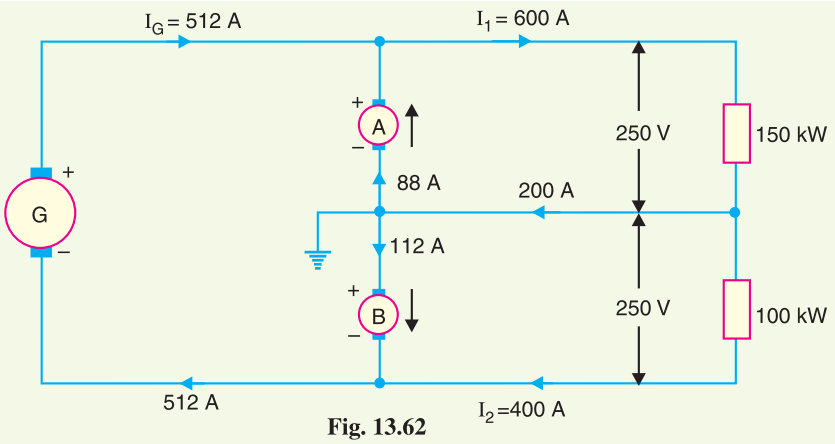

Fig. 13.62

(*ii*) Current supplied by the main generator,

$I_G = 256 \times 10^3/500 = 512$ A

Load current on +ve side, $I_1 = 150 \times 10^3/250 = 600$ A

Load current on –ve side, $I_2 = 100 \times 10^3/250 = 400$ A

Current in neutral wire $= I_1 - I_2 = 600 - 400 = 200$ A

Current through machine *A* $= I_1 - I_G = 600 - 512 = 88$ A

Current through machine *B* $= I_G - I_2 = 512 - 400 = 112$ A

∴ Load on machine *A* $= 88 \times 250/1000 =$ **22 kW**

Load on machine *B* $= 112 \times 250/1000 =$ **28 kW**

Example 13.34. *In a 500/250 V d.c. 3-wire system, there is a current of 1200 A on the +ve side and 1000 A on the –ve side and a motor load of 200 kW across the outers. The loss in each balancer machine is 5 kW. Calculate :*

(*i*) *current of the main generator*

(*ii*) *load on each balancer machine*

Solution. The connections are shown in Fig. 13.63. As the positive side is more heavily loaded, therefore, machine *A* acts as a generator and machine *B* as a motor.

Load on +ve side, $P_1 = 250 \times 1200/1000 = 300$ kW

Load on –ve side, $P_2 = 250 \times 1000/1000 = 250$ kW

Load on outers, $P_3 = 200$ kW

(*i*) Total load on the main generator $= P_1 + P_2 + P_3 +$ loss in balancer machines

$= 300 + 250 + 200 + 10 = 760$ kW

Current of main generator, $I_G = 760 \times 10^3/500 =$ **1520 A**

(*ii*) Current in neutral $= 1200 - 1000 = 200$ A

Current through machine *A* $= 1600 - 1520 = 80$ A

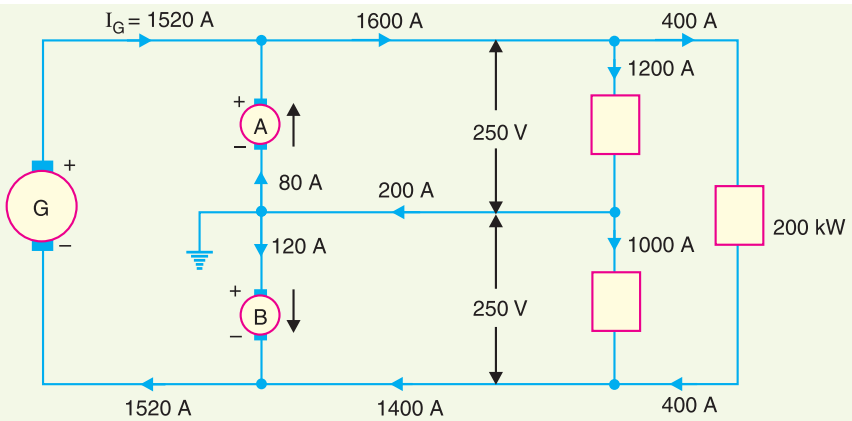

Fig. 13.63

Current thro' machine *B* $= 1520 - 1400 = 120$ A

Load on machine *A* $= 80 \times 250/1000 =$ **20 kW**

Load on machine *B* $= 120 \times 250/1000 =$ **30 kW**

Example 13.35. *A d.c. 3-wire system with 500 volts across outers supplies 800 A on the positive side and 550 A on the negative side and 1500 A across the outers. The rotary balancer has each an*

armature resistance of 0·2 Ω and takes 5 A on no load. Find :

(*i*) *current loading of each balancer machine*

(*ii*) *the voltage across each balancer machine*

(*iii*) *total load on the main generator*

Solution. The connections are shown in Fig. 13.64. As the positive side is more heavily loaded, therefore, machine *A* acts as a generator and machine *B* as a motor.

Total current on +ve side = 800 + 1500 = 2300 A

Total current on –ve side = 550 + 1500 = 2050 A

Current in neutral wire = 800 – 550 = 250 A

Let the current through machines *A* and *B* be I_A and I_B respectively. Then $I_A + I_B$ must be equal to current in the neutral wire *i.e.*

$$I_A + I_B = 250$$

or $$I_A = 250 - I_B$$

(*i*) Let V_A and V_B be the p.d.s. of machines *A* and *B* respectively. Since machine *B* is driving the machine *A*, output of *B* supplies the losses in the set plus the output of machine *A* *i.e.*

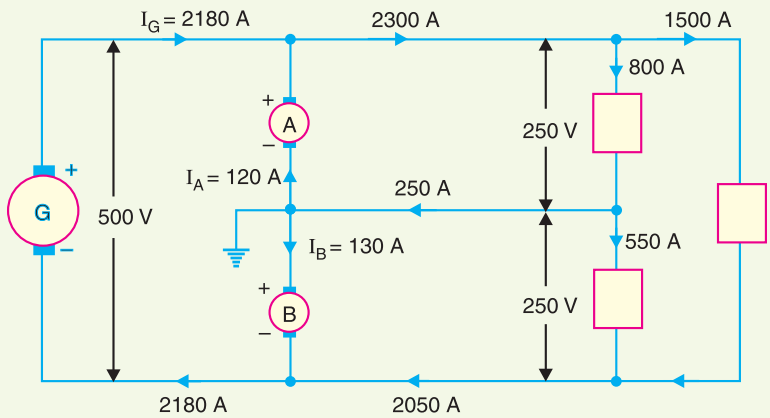

Fig. 13.64

Output of machine *B* = Output of machine A + *Losses in the set

or $$V_B I_B = V_A I_A + 500 \times 5 + I^2_A R_A + I^2_B R_B$$

∴ $$V_B I_B = V_A (250 - I_B) + 2500 + (250 - I_B)^2 \times 0{\cdot}2 + 0{\cdot}2 I^2_B \quad ...(i)$$

Each machine has same value of back e.m.f. *E* since their field currents and speeds are the same.

Back e.m.f., $$E = 250 - 0{\cdot}2 \times 5 = 249 \text{ V}$$

Terminal p.d. across *A*, $$V_A = E - I_A R_A = 249 - 0{\cdot}2\,(250 - I_B)$$

∴ $$V_A = 199 + 0{\cdot}2\, I_B \quad ...(ii)$$

Terminal p.d. across *B*, $$V_B = E + I_B R_B$$

$$= 249 + 0{\cdot}2\, I_B \quad ...(iii)$$

Substituting the values of V_A and V_B in exp. (*i*), we get,

$$(249 + 0{\cdot}2\, I_B)\, I_B = (199 + 0{\cdot}2\, I_B)\,(250 - I_B) + 2500 + (250 - I_B)^2 \times 0{\cdot}2 + 0{\cdot}2 I^2_B$$

or $$249\, I_B + 0{\cdot}2\, I_B^2 = 49{,}750 - 199\, I_B + 50\, I_B - 0{\cdot}2\, I^2_B + 2500 + 12{,}500 + 0{\cdot}2\, I^2_B - 100\, I_B + 0{\cdot}2\, I^2_B$$

* Losses in the set = No load losses + Copper losses

$$= 500 \times 5 + I^2_A R_A + I^2_B R_B$$

or $498\, I_B = 64{,}750$

$\therefore$ $I_B = 64750/498 =$ **130 A**

and $I_A = 250 - 130 =$ **120 A**

(ii) Voltage across machine *A*, $V_A = 199 + 0{\cdot}2\, I_B = 199 + 0{\cdot}2 \times 130 =$ **225 V**

Voltage across machine *B*, $V_B = 249 + 0{\cdot}2\, I_B = 249 + 0{\cdot}2 \times 130 =$ **275 V**

(iii) Load on main generator $= 2300 - I_A = 2300 - 120 =$ **2180 A**

TUTORIAL PROBLEMS

1. A load on 3-wire d.c. system with 500 V between the outers consists of 1500 A on the positive side and 1300A on the negative side while motors connected across outers absorb 500 kW. Assuming each balancer machine has a loss of 3·75 kW, calculate the load on the main generator and each balancer machine. **[1207·5 kW ; 21·25 kW ; 28·75 kW]**
2. In a 500/250 V d.c. 3-wire system, there is a current of 2000 A on the +ve side, 1600A on the negative side and a load of 300 kW across the outers. The loss in each balancer set is 8 kW. Calculate the current in each armature of the balancer set and total load on the main generator. **[168A ; 232A ; 1216 kW]**
3. In a 500/250 volt 3-wire d.c. system, there is an out of balance load of 200 kW on the positive side. The loss in each balancer set is 10 kW and the current in the negative main is 2800A. Calculate the current in each armature of the balancer set and the total load on the generator. **[440A ; 360A ; 1620 kW]**

13.13 Boosters

A **booster** *is a d.c. generator whose function is to inject or add certain voltage into a circuit so as to compensate the IR drop in the feeders etc.*

A booster is essentially a series d.c. generator of large current capacity and is connected in series with the feeder whose voltage drop is to be compensated as shown in Fig. 13.65. It is driven at constant speed by a shunt motor working from the bus-bars. As the booster is a series generator, therefore, voltage generated by it is directly proportional to the field current which is here the feeder current. When the feeder current increases, the voltage drop in the feeder also increases. But increased feeder current results in greater field excitation of booster which injects higher voltage into the feeder to compensate the voltage drop. For exact compensation of voltage drop, the booster must be marked on the straight or linear portion of its voltage-current characteristics.

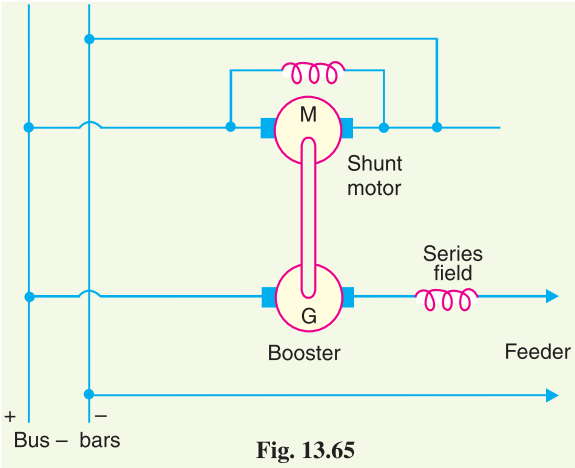

Fig. 13.65

It might be suggested to compensate the voltage drop in the feeder by overcompounding the generators instead of using a booster. Such a method is not practicable for feeders of different lengths because it will disturb the voltage of other feeders. The advantage of using a booster is that each feeder can be regulated independently — a great advantage if the feeders are of different lengths.

Example 13.36. *A 2-wire system has the voltage at the supply end maintained at 500 V. The line is 3 km long. If the full-load current is 120 A, what must be the booster voltage and output in order that the far end voltage may also be 500 V ? Take the resistance of the cable at the working temperature as 0·5 Ω/km.*

Solution.

Total resistance of line $= 0{\cdot}5 \times 3 = 1{\cdot}5\,\Omega$

F.L. voltage drop in the line $= 1{\cdot}5 \times 120 = 180$ V

$\therefore$ Terminal voltage of booster = **180 V**

$$\text{Output of booster} = \frac{120 \times 180}{1000}\ \text{kW} = \mathbf{21{\cdot}6\ kW}$$

13.14 Comparison of 3-Wire and 2-Wire D.C. Distribution

It is worthwhile to make a comparison between 3-wire and 2-wire systems for d.c. distribution. It will be shown that there is a great saving of conductor material if we use 3-wire system instead of 2-wire system for d.c. distribution. For comparison, it will be assumed that :

(*i*) the amount of power P transmitted is the same

(*ii*) the *voltage V at the consumer's terminals is the same

(*iii*) the distance of transmission is the same

(*iv*) the efficiency of transmission (and hence losses) is the same

(*v*) the 3-wire system is balanced *i.e.* no current in the neutral wire

(*vi*) the area of X-section of neutral wire is half the cross-section of outers in 3-wire system

Let R_2 = resistance of each conductor in 2-wire system

R_3 = resistance of each outer in 3-wire system

Current through outers in case of 3-wire system is

$$I_3 = P/2V$$

Total loss in two outers $= 2\,I_3^2\,R_3 = 2\,(P/2V)^2\,R_3$

Current in 2-wire system, $I_2 = P/V$

Total loss $= 2\,I_2^2\,R_2 = 2\,(P/V)^2\,R_2$

Since efficiency of transmission is the same, it means losses are the same *i.e.*

$$2\,(P/2V)^2\,R_3 = 2\,(P/V)^2\,R_2$$

$$\therefore \quad R_3 = 4\,R_2$$

Therefore, the area of X-section of outers in 3-wire case will be one-fourth of each conductor in 2-wire case.

Let a = area of X-section of each conductor is 2-wire case

Then $a/4$ = area of X-section of each outer in 3-wire case

and $a/8$ = area of X-section of neutral wire [assumption (*vi*) above]

If l is the length of the line, then,

$$\text{Volume of Cu for 3-wire system} = l\left(\frac{a}{4}+\frac{a}{4}+\frac{a}{8}\right) = \frac{5}{8}\,a\,l$$

$$\text{Volume of Cu for 2-wire system} = l\,(a+a) = 2\,a\,l$$

$$\therefore \quad \frac{\text{Volume of Cu for 3-wire system}}{\text{Volume of Cu for 2-wire system}} = \frac{5}{8}\,a\,l \times \frac{1}{2\,a\,l} = \frac{5}{16}$$

Hence a 3-wire system requires only 5/16 th (or 31·25%) as much copper as a 2-wire system.

Note. If the neutral has the same X-section as the outer, then,

$$\text{Volume of Cu for 3-wire system} = l\left(\frac{a}{4}+\frac{a}{4}+\frac{a}{4}\right) = \frac{3}{4}\,a\,l$$

$$\text{Volume of Cu for 2-wire system} = l\,(a+a) = 2\,a\,l$$

* Note that in case of 3-wire system, the voltage between the outers will be 2V.

$$\therefore \quad \frac{\text{Volume of Cu for 3-wire system}}{\text{Volume of Cu for 2-wire system}} = \frac{3}{4}\,a\,l \times \frac{1}{2\,a\,l} = \frac{3}{8} \text{ or } 37{\cdot}5\%$$

13.15 Ground Detectors

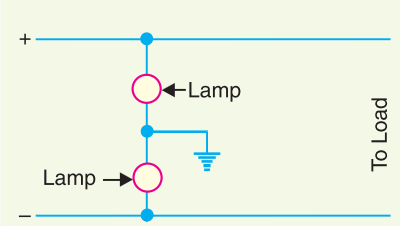

Fig. 13.66

Ground detectors are the devices that are used to detect/indicate the ground fault for ungrounded d.c. systems. When a ground fault occurs on such a system, immediate steps should be taken to clear it. If this is not done and a second ground fault happens, a short circuit occurs. Lamps are generally used for the detection of ground faults. They are connected for ungrounded 2-wire system as shown in Fig. 13.66. Each lamp should have a voltage rating equal to the line voltage. The two lamps in series, being subjected to half their rated voltage, will glow dimly. If a ground fault occurs on either wires, the lamp connected to the grounded wire will not glow while the other lamp will glow brightly.

SELF - TEST

1. Fill in the blanks by inserting appropriate words/figures.

(*i*) In a singly fed distributor, if fault occurs on any section, the supply to all consumers has to be .....

(*ii*) A ring main distributor fed at one end is equivalent to ..... fed at both ends with equal voltages.

(*iii*) A distributor is designed from ..... considerations.

(*iv*) The point of minimum potential of a uniformly loaded distributor fed at both ends with equal voltages will occur at .....

(*v*) The d.c. interconnector is used ..... the voltage drops in the various sections of the distributor.

(*vi*) In a 3 wire d.c. system, the load on +ve side is 400A and on negative side it is 300A. Then current in neutral wire is .....

(*vii*) In a balanced 3-wire d.c. system, the potential of neutral is ..... between that of outers.

(*viii*) A booster is used to ..... voltage drop in feeders *etc*.

(*ix*) Balancer set is used to maintain voltage on the two sides of the neutral .....

(*x*) In a balanced 3-wire d.c. system, if voltage across the outers is 500 V, then voltage between any outer and neutral is .....

2. Pick up the correct words/figures from brackets and fill in the blanks.

(*i*) The voltage drop in a doubly fed distributor is ..... than the equivalent singly fed distributor. (*less, more*)

(*ii*) In a 3-wire system, the area of X-section of neutral is generally ..... of either outer. (*half, double*)

(*iii*) If in a 3-wire d.c. system, the current in the neutral wire is zero, then voltage between any outer and neutral is ..... (*the same, different*)

(*iv*) A booster is connected in ..... with the feeder. (*series, parallel*)

(*v*) For exact compensation of voltage drop in the feeder, the booster must work on ..... portion of its V—I characteristic. (*linear, non-linear*)

(*vi*) The balancer machine connected to the heavily loaded side works as a ..... (*generator, motor*)

ANSWERS TO SELF-TEST

1. (*i*) shut off (*ii*) straight distributor (*iii*) voltage drop (*iv*) mid-point (*v*) to reduce (*vi*) 100 A (*vii*) midway (*viii*) compensate (*ix*) equal to each other (*x*) 250 V

2. (*i*) less (*ii*) half (*iii*) the same (*iv*) series (*v*) linear (*vi*) generator

CHAPTER REVIEW TOPICS

1. Describe briefly the different types of d.c. distributors.
2. What are the advantages of a doubly fed distributor over singly fed distributor ?
3. Derive an expression for the voltage drop for a uniformly loaded distributor fed at one end.
4. What is the purpose of interconnector in a d.c. ring main distributor ?
5. Explain 3-wire d.c. system of distribution of electrical power.
6. What are the advantages of 3-wire distribution over 2-wire distribution ?
7. Show with a neat diagram how unbalanced loads in a 3-wire d.c. system cause unequal voltages on the two sides of the neutral.
8. Explain the use of rotary balancer in a 3-wire d.c. distribution system.
9. What is a booster ? With a neat diagram, explain how it can be used on a feeder.
10. Write short notes on the following :
    (*i*) Ring main distributor
    (*ii*) Current distribution in a 3-wire d.c. system
    (*iii*) Balancers

DISCUSSION QUESTIONS

1. What is the importance of minimum potential on the distributor ?
2. Why is 3-wire d.c. distribution preferred to 2-wire d.c. distribution ?
3. Which points of d.c. ring main should be connected through interconnector ?
4. Can we use compound generator as a booster ?
5. Why do we use a balancer set ?
6. Can exact balance of voltages to obtained with a balancer set ?

GO To FIRST